OPERATION MANUAL

SK330-10
SK350LC-10

APPLICABLE No.

SK330-10	LC14-18001~
SK350LC-10	YC14-14001~
SK330-10	LC14020001~
SK350LC-10	YC14020001~



READ, UNDERSTAND AND FOLLOW ALL SAFETY PRECAUTIONS AND INSTRUCTIONS FOUND IN THIS MANUAL BEFORE OPERATING THE MACHINE.

Book Code No. S2LC00054ZE11

2022.06
Destination : ANZ

Copyright©2022 Kobelco Construction Machinery Co.,Ltd. All rights reserved. [S2LC00054ZE11] [0609CsCshWbYs]

Copyright©2022 Kobelco Construction Machinery Co.,Ltd. All rights reserved. [S2LC00054ZE11] [0609CsCshWbYs]

[CONTENTS]

IMPORTANT INFORMATION

PREFACE 0-3
STORE OPERATION & MAINTENANCE MANUALS ON THE MACHINE 0-4
SAFETY INFORMATION IN MESSAGES OR LABELS IN THIS MANUAL AND ON THE MACHINE 0-5
SAFETY LABELS 0-5
SUMMARY OF THE MACHINE 0-7
QUALIFICATION FOR OPERATING THE MACHINE 0-8
CAB WITH ROPS (ROLL-OVER PROTECTIVE STRUCTURE)/FALLING OBJECTS PROTECTIVE STRUCTURE 0-9
ORDERING PARTS AND SERVICE 0-10
WARRANTY 0-11
IMPORTANT NOTIFICATION 0-12

1. SAFETY PRECAUTIONS

1.1 SAFETY LABELS & DECALS 1-3
1.1.1 ALWAYS MAKE SURE ALL OF THE SAFETY LABELS ARE LEGIBLE AND NOT DAMAGED 1-3
1.1.2 LOCATION OF SAFETY LABELS & DECALS 1-4
1.1.3 SAFETY LABELS 1-7
1.2 PRE-START SAFETY 1-14
1.2.1 OPERATION RULES 1-14
1.2.2 PROTECTION TOOLS 1-15
1.2.3 ABNORMAL AND EMERGENCY CONDITION 1-16
1.2.4 POTENTIAL HAZARDS WHEN OPERATING 1-17
1.2.5 FIRE PREVENTION 1-18
1.2.6 GETTING ON AND OFF THE MACHINE 1-19
1.2.7 INSPECTION AND MAINTENANCE ON THE MACHINE 1-20
1.3 SECURE VISIBILITY 1-21
1.3.1 BE AWARE OF YOUR SURROUNDINGS 1-21
1.4 PRECAUTIONS FOR OPERATION 1-22
1.4.1 STARTING 1-22
1.4.2 TRAVELING 1-26
1.4.3 PRECAUTIONS OF WORK 1-29
1.4.4 SAFETY CHECK ON THE PARKING MACHINE 1-35
1.5 AT THE END OF EACH SHIFT 1-36
1.6 PRECAUTIONS OF INSPECTION & MAINTENANCE 1-37
1.6.1 PERIODIC INSPECTIONS 1-37
1.6.2 BEFORE INSPECTION & MAINTENANCE 1-37
1.6.3 DURING INSPECTION & MAINTENANCE 1-38
1.6.4 PROHIBITED IN INSPECTION & MAINTENANCE 1-43
1.6.5 AFTER INSPECTION & MAINTENANCE 1-44
1.7 PRECAUTIONS FOR BATTERY 1-45
1.7.1 HANDLING THE BATTERY 1-45
1.8 HANDLING OF THE ACCUMULATOR OR GAS SPRING 1-47
1.9 TOWING THE MACHINE 1-48
1.9.1 TOWING METHOD OF THE MACHINE 1-48

Copyright©2022 Kobelco Construction Machinery Co.,Ltd. All rights reserved. [S2LC00054ZE11] [0609CsCshWbYs]

[CONTENTS]

2. MACHINE FAMILIARIZATION

2.1 BASIC COMPONENTS OF THE MACHINE 2-3
2.2 OPERATOR'S STATION NOMENCLATURE 2-5
2.3 GAUGE CLUSTER 2-7
2.3.1 MULTI-DISPLAY 2-8
2.3.2 ENGINE COOLANT TEMPERATURE METER 2-8
2.3.3 FUEL LEVEL METER 2-8
2.3.4 HOUR METER 2-8
2.3.5 SCREEN CHANGE SWITCH 2-9
2.3.6 BUZZER STOP SWITCH 2-10
2.3.7 WORK MODE SELECT SWITCH 2-11
2.3.8 WASHER SWITCH 2-12
2.3.9 WIPER SWITCH 2-12
2.3.10 TRAVEL SPEED SELECT SWITCH 2-13
2.3.11 AUTO ACCELERATION SWITCH 2-14
2.3.12 ATTACHMENT MODE SELECT SWITCH 2-15
2.3.13 MENU SWITCH 2-16
2.3.14 USER MENU SETTING 2-17
2.3.15 DISPLAY FOR MAINTENANCE 2-28
2.3.16 WARNING DISPLAY SCREEN 2-29
2.4 HANDLING OF SWITCHES AND METERS 2-32
2.4.1 STARTER SWITCH 2-32
2.4.2 ENGINE THROTTLE 2-32
2.4.3 WORKING LIGHT (BOOM AND DECK) 2-33
2.4.4 HEAVY LIFT SWITCH 2-33
2.4.5 PRESSURE RELEASE SWITCH 2-34
2.4.6 QUICK HITCH OPERATION SWITCH 2-34
2.4.7 CAP (OPTION SWITCH) 2-35
2.4.8 HORN SWITCH 2-35
2.4.9 POWER BOOST SWITCH 2-35
2.4.10 ENGINE THROTTLE FOR REDUNDANT MODE 2-36
2.4.11 SWING PARKING BRAKE RELEASE SWITCH 2-37
2.4.12 KPSS RELEASE SWITCH 2-37
2.4.13 ENGINE STOP SWITCH 2-38
2.4.14 12 V POWER SUPPLY 2-38
2.4.15 USB PORT/EXTERNAL INPUT TERMINAL (AUX) 2-39
2.4.16 Level Gauge 2-39
2.5 HANDLING OF LEVERS AND PEDALS 2-40
2.5.1 LOCATION OF LEVERS AND PEDALS 2-40
2.5.2 CONTROL LOCK LEVER 2-41
2.5.3 OPERATOR CONTROL LEVERS 2-42
2.5.4 TRAVEL LEVER & PEDAL 2-43
2.6 HANDLING OF FUSE & RELAY BOX 2-44
2.6.1 ABOUT FUSE & RELAY BOX 2-44
2.6.2 REPLACING FUSES 2-44
2.6.3 FUSE CAPACITY AND CIRCUIT NAME 2-45

Copyright©2022 Kobelco Construction Machinery Co.,Ltd. All rights reserved. [S2LC00054ZE11] [0609CsCshWbYs]

2.7 HANDLING OF FUSIBLE LINK (FOR STARTER) 2-46
2.7.1 FUSIBLE LINK INSPECTION/REPLACEMENT 2-47
2.8 CONTROLLER 2-48
2.9 HANDLING OF RADIO TUNER 2-49
2.9.1 NAME OF EACH PART 2-49
2.9.2 ON-AIR (NORMAL CONDITION) 2-50
2.9.3 SWITCHING SOURCE 2-51
2.9.4 FM/AM 2-52
2.9.5 BLUETOOTH AUDIO FUNCTION, AND EXTERNAL INPUT TERMINAL 2-57
2.9.6 PAIRING (REGISTRATION OF DEVICES) 2-58
2.9.7 TELEPHONE FUNCTION 2-60
2.9.8 FILE PLAYING FUNCTION 2-62
2.9.9 VOLUME CONTROL 2-63
2.9.10 SOUND ADJUSTMENT 2-64
2.9.11 CLOCK ADJUSTMENT 2-68
2.10 AIR CONDITIONER 2-69
2.10.1 GRILLE (AIR OUTLET) 2-69
2.10.2 AIR CONDITIONER CONTROL PANEL 2-70
2.10.3 AIR CONDITIONER OPERATION PANEL 2-71
2.10.4 HOW TO USE AIR CONDITIONER 2-74
2.10.5 SELF-DIAGNOSIS FUNCTION IN DISPLAY MONITOR 2-76
2.10.6 HANDLING AT IN-SEASON/OFF-SEASON 2-77
2.11 HANDLING OF SEAT BELT 2-78
2.11.1 HOW TO FASTEN SEAT BELT 2-78
2.11.2 HOW TO UNFASTEN SEAT BELT 2-78
2.12 HANDLING OF OPERATOR'S SEAT 2-79
2.12.1 HEIGHT AND TILT ADJUSTMENT 2-79
2.12.2 RECLINING ADJUSTMENT 2-79
2.12.3 FRONT/REAR SEAT ADJUSTMENT 2-79
2.12.4 FORWARD AND REARWARD ADJUSTMENT OF CONTROL STAND 2-80
2.12.5 ARM REST ADJUSTMENT 2-80
2.12.6 HEAD REST ADJUSTMENT 2-80
2.12.7 SUSPENSION ADJUSTMENT 2-80
2.13 HANDLING PARTS INSIDE CAB 2-81
2.13.1 CAB DOOR LOCK 2-81
2.13.2 OPENING DOOR FROM INSIDE OF CAB 2-81
2.13.3 OPENING/CLOSING FRONT WINDOW (UPPER) 2-82
2.13.4 RETRACTING FRONT WINDOW (LOWER) 2-83
2.13.5 CAB ROOM LAMP 2-83
2.14 EMERGENCY ESCAPE FROM OPERATOR'S STATION 2-84
2.15 OTHER ACCESSORIES 2-85
2.15.1 TOOL BOX 2-85
2.15.2 GREASE GUN HOLDER 2-85
2.15.3 CUP HOLDER 2-85
2.15.4 GUARD/SIDE DOOR (WITH LOCK) 2-86
2.16 BATTERY POWER-OFF SWITCH 2-88

Copyright©2022 Kobelco Construction Machinery Co.,Ltd. All rights reserved. [S2LC00054ZE11] [0609CsCshWbYs]

[CONTENTS]

3. MACHINE OPERATION

3.1 EVERYDAY CHECK-UP 3-3
3.2 CHECK BEFORE STARTING ENGINE 3-4
3.2.1 CHECKING COOLANT LEVEL AND REFILLING 3-4
3.2.2 CHECKING ENGINE OIL LEVEL OF ENGINE OIL PAN AND REFILLING 3-5
3.2.3 CHECKING FUEL LEVEL AND REFUELING 3-6
3.2.4 DRAINING FUEL PRE-FILTER 3-7
3.2.5 CHECKING OIL LEVEL OF HYDRAULIC OIL TANK 3-8
3.2.6 CHECKING FAN BELT AND AIR CONDITIONING COMPRESSOR BELT 3-9
3.2.7 ADJUSTMENT OF OPERATOR'S SEAT 3-10
3.2.8 ADJUSTMENT OF MIRRORS 3-11
3.2.9 CHECKING MULTI-DISPLAY 3-13
3.2.10 CHECKING WORKING LIGHT 3-14
3.2.11 CHECKING OF AIR CLEANER INLET 3-14
3.3 STARTING ENGINE 3-15
3.3.1 START-UP UNDER NORMAL TEMPERATURE CONDITIONS 3-15
3.3.2 START UP IN COLD CONDITIONS 3-16
3.3.3 USING JUMPER CABLES 3-17
3.4 STOPPING MACHINE ENGINE 3-19
3.5 CHECK AFTER STARTING ENGINE 3-20
3.5.1 CHECK OF PILOT CONTROL SHUT-OFF LEVER 3-20
3.5.2 CHECK OF ENGINE AND MULTI-DISPLAY 3-21
3.6 WARMING-UP 3-22
3.6.1 ENGINE WARMING-UP 3-22
3.6.2 WARMING-UP HYDRAULIC OIL 3-23
3.7 AUTO IDLING STOP FUNCTION 3-24
3.7.1 RESTART AFTER AUTO IDLE STOP 3-24
3.8 SELECTION OF WORK MODE 3-25
3.9 SWITCHING ATTACHMENT MODE 3-26
3.10 MACHINE OPERATION 3-27
3.10.1 PRECAUTIONS OF MACHINE OPERATION 3-27
3.10.2 TRAVEL PROCEDURES 3-28
3.10.3 CHANGING TRAVEL SPEED (1ST AND 2ND) 3-30
3.10.4 MACHINE OPERATION IN WATER OR ON SOFT GROUND 3-31
3.10.5 GETTING OUT OF SOFT GROUND 3-32
3.10.6 SWING AND ATTACHMENT OPERATIONS 3-33
3.11 WORK PROCEDURES OF MACHINE 3-36
3.11.1 DIGGING WORK 3-36
3.11.2 LOADING WORK 3-36
3.12 ALWAYS PARK MACHINE PROPERLY 3-37
3.12.1 PARKING MACHINE ON SLOPE 3-37
3.13 INSPECTION AND CHECK AFTER OPERATION 3-38
3.14 MACHINE OPERATION IN ADVERSE CONDITIONS 3-39
3.14.1 OPERATION IN COLD CONDITION 3-39
3.14.2 OPERATION AT SEASHORE 3-40
3.14.3 OPERATION IN SANDY AND DUSTY AREAS 3-40
3.15 PRECAUTIONS FOR LONG-TERM STORAGE 3-41

Copyright©2022 Kobelco Construction Machinery Co.,Ltd. All rights reserved. [S2LC00054ZE11] [0609CsCshWbYs]

3.15.1 WASHING MACHINE 3-41
3.15.2 REFILLING OIL/GREASING 3-41
3.15.3 BATTERY 3-41
3.15.4 COOLANT 3-41
3.15.5 PREVENTION OF DUST AND MOISTURE 3-42
3.15.6 PERIODICAL LUBRICATING OPERATION (DURING STORAGE) 3-42
3.15.7 TREATMENT AFTER LONG-TERM STORAGE 3-42

4. INSPECTION AND MAINTENANCE

4.1 GENERAL 4-3
4.2 INSPECTING AND MAINTAINING MACHINE 4-4
4.2.1 PERIODIC INSPECTION AND MAINTENANCE 4-4
4.2.2 PRECAUTIONS OF INSPECTION AND MAINTENANCE 4-4
4.3 LUBRICANT, FUEL & COOLANT SPECIFICATIONS 4-5
4.4 ABOUT USE OF BIO-OIL (BIODEGRADABLE HYDRAULIC OIL) 4-7
4.4.1 GREASE AND OIL FOR USE 4-7
4.4.2 PRECAUTIONS FOR BIO-OIL 4-7
4.4.3 REPLACEMENT INTERVAL OF BIO-OIL 4-7
4.4.4 FLUSHING PROCEDURES OF BIO-OIL 4-7
4.5 MAINTENANCE PARTS 4-8
4.6 TIGHTENING TORQUES FOR BOLTS & NUTS (SPECIFIC POSITIONS) 4-9
4.7 TIGHTENING TORQUES FOR CAPSCREWS AND NUTS 4-11
4.8 TIGHTENING TORQUES FOR JOINTS & HYDRAULIC HOSES 4-13
4.9 INSPECTION AND MAINTENANCE CHART 4-15
4.10 MAINTENANCE WHEN REQUIRED 4-20
4.10.1 CLEANING RADIATOR, OIL COOLER CORE AND SCREEN 4-20
4.10.2 CHECKING AND REPLACING WIPER BLADES 4-21
4.10.3 WASHER FLUID INSPECTION 4-22
4.10.4 REPLACING BUCKET 4-23
4.10.5 REPLACING TOOTH POINT AND SIDE CUTTER 4-25
4.10.6 INSPECTION AND ADJUSTMENT OF BUCKET GAP ADJUSTMENT MECHANISM 4-28
4.10.7 BLEEDING AIR FROM FUEL PIPING 4-29
4.10.8 RELEASING INTERNAL PRESSURE IN HYDRAULIC SYSTEM 4-30
4.10.9 GREASING ATTACHMENT/EQUIPMENT 4-31
4.10.10 GREASING ATTACHMENT/EQUIPMENT (2 POSITION BOOM) 4-32
4.11 8 HOUR (DAILY) INSPECTION & MAINTENANCE PROCEDURES 4-33
4.11.1 GREASING ATTACHMENT 4-33
4.12 50 HOUR INSPECTION & MAINTENANCE PROCEDURES 4-35
4.12.1 INSPECTING AND MAINTAINING BATTERY 4-35
4.12.2 DRAINING WATER AND SEDIMENT IN FUEL TANK 4-38
4.12.3 ADJUSTING CRAWLER TENSION 4-39
4.13 120 HOUR INSPECTION & MAINTENANCE PROCEDURES 4-41
4.13.1 CHECKING OIL LEVEL OF SWING REDUCTION UNIT 4-41
4.13.2 CHECKING OIL LEVEL OF TRAVEL REDUCTION UNIT 4-42
4.13.3 CHECKING INTAKE SYSTEM RUBBER HOSE 4-43
4.14 250 HOUR (3-MONTH) INSPECTION & MAINTENANCE PROCEDURES 4-45

Copyright©2022 Kobelco Construction Machinery Co.,Ltd. All rights reserved. [S2LC00054ZE11] [0609CsCshWbYs]

[CONTENTS]

4.14.1 ADJUSTING FAN BELT AND AIR CONDITIONING COMPRESSOR BELT....4-45
4.14.2 CHECKING RADIATOR HOSES....4-49
4.14.3 CLEANING OR REPLACING AIR CONDITIONER FILTERS....4-51
4.14.4 INSPECTING, CLEANING, OR REPLACING AIR CLEANER ELEMENT....4-53
4.14.5 CLEANING OR REPLACING RADIATOR CAP....4-55
4.15 500 HOUR (6-MONTH) INSPECTION & MAINTENANCE PROCEDURES....4-56
4.15.1 REPLACING ENGINE OIL AND ENGINE OIL FILTER....4-56
4.15.2 REPLACING FUEL PRE-FILTER....4-58
4.15.3 REPLACING FUEL FILTER....4-60
4.15.4 GREASING SWING BEARING....4-62
4.15.5 CHECKING SWING BEARING MOUNTING BOLT FOR LOOSENESS....4-62
4.15.6 CLEANING FUEL TANK CAP AND STRAINER....4-63
4.15.7 LUBRICATING PUSH ROD OF CONTROL LEVER....4-64
4.15.8 CHECKING AIR CONDITIONER REFRIGERANT....4-65
4.16 1000 HOUR (12-MONTH) INSPECTION & MAINTENANCE PROCEDURES....4-67
4.16.1 REPLACING RETURN FILTER....4-67
4.16.2 REPLACING AIR BREATHER ELEMENT....4-69
4.16.3 CHECKING ENGINE MOUNTING BRACKET FOR TIGHTENING CONDITION....4-70
4.16.4 CHECKING BATTERY VOLTAGE....4-70
4.17 2000 HOUR INSPECTION & MAINTENANCE PROCEDURES....4-71
4.17.1 REPLACING COOLANT....4-71
4.17.2 REPLACING OIL IN SWING REDUCTION UNIT....4-73
4.17.3 REPLACING OIL IN TRAVEL REDUCTION UNITS....4-74
4.17.4 CLEANING SUCTION STRAINER....4-75
4.17.5 GREASING SWING REDUCTION UNIT....4-77
4.17.6 CHECKING GREASE IN SWING GREASE BATH....4-78
4.17.7 CLEANING PILOT LINE FILTER....4-79
4.18 5000 HOUR INSPECTION & MAINTENANCE PROCEDURES....4-80
4.18.1 REPLACING HYDRAULIC OIL....4-80

5. TRANSPORTATION

5.1 TRANSPORTATION....5-3
5.1.1 STRICTLY OBSERVE TRANSPORTATION RELATED REGULATIONS....5-3
5.2 LOADING/UNLOADING THE MACHINE....5-5
5.2.1 LOADING....5-6
5.2.2 FIXING THE MACHINE....5-8
5.2.3 UNLOADING....5-10
5.3 MACHINE LIFTING....5-11
5.3.1 LIFTING PROCEDURES....5-13
5.4 INSTALLING AND REMOVING MIRROR....5-14

6. SPECIFICATION

6.1 GENERAL SPECIFICATIONS....6-3
6.1.1 SK330-10, SK350LC-10....6-3
6.2 SHOE TYPES AND USES....6-5
6.2.1 SK330-10....6-5

Copyright©2022 Kobelco Construction Machinery Co.,Ltd. All rights reserved. [S2LC00054ZE11] [0609CsCshWbYs]

6.2.2 SK350LC-10 6-6
6.2.3 SK350LC-10(HIGH & WIDE) 6-6
6.3 WORKING RANGES 6-7
6.3.1 BACKHOE ATTACHMENT 6-7
6.4 ATTACHMENT TYPE AND COMBINATION 6-9
6.4.1 FRONT ATTACHMENT VARIATION 6-9

7. MACHINE OPERATION MANAGEMENT SYSTEM

7.1 MACHINE OPERATION MANAGEMENT SYSTEM 7-3
7.2 REMOTE DOWNLOAD SYSTEM 7-4

8. OPTIONAL EQUIPMENT

8.1 OPERATION OF HYDRAULIC NIBBLER (CRUSHER) AND BREAKER 8-3
8.1.1 SELECTION OF NIBBLER (CRUSHER) AND BREAKER 8-3
8.1.2 INSTALLATION OF NIBBLER (CRUSHER) OR BREAKER 8-3
8.1.3 PRECAUTIONS IN USE OF BREAKER 8-3
8.1.4 PRECAUTIONS IN USE OF NIBBLER (CRUSHER) 8-8
8.2 SELECTION OF ATTACHMENT MODE AND SELECTOR VALVE 8-13
8.2.1 SELECTION OF ATTACHMENT MODE 8-13
8.2.2 SWITCHING SELECTOR VALVE 8-15
8.3 SWITCHING STOP VALVE 8-16
8.4 FLOW RATE ADJUSTMENT 8-17
8.5 OPERATION 8-18
8.5.1 PEDAL LOCK DEVICE 8-18
8.5.2 PEDAL OPERATIONS FOR HYDRAULIC BREAKER AND NIBBLER (CRUSHER) OPENING/ CLOSING 8-19
8.5.3 PEDAL OPERATION FOR NIBBLER (CRUSHER) ROTATION 8-20
8.6 CONTROL OF PROPORTIONAL HAND CONTROL EXTRA, NIBBLER (CRUSHER), BREAKER 8-21
8.6.1 EXTRA HAND CONTROL 8-22
8.6.2 HORN SWITCH 8-22
8.6.3 NIBBLER (CRUSHER) OPERATION 8-22
8.6.4 BREAKER OPERATION 8-23
8.6.5 POWER BOOST SWITCH 8-23
8.7 CONTROL OF PROPORTIONAL HAND CONTROL NIBBLER (CRUSHER), BREAKER 8-24
8.7.1 HORN SWITCH 8-25
8.7.2 NIBBLER (CRUSHER) OPERATION 8-25
8.7.3 BREAKER OPERATION 8-26
8.7.4 POWER BOOST SWITCH 8-26
8.8 PERIODIC INSPECTION AND MAINTENANCE OF NIBBLER (CRUSHER) AND BREAKER 8-27
8.8.1 PERIODIC INSPECTION AND MAINTENANCE CHART OF NIBBLER (CRUSHER) AND BREAKER 8-27
8.8.2 REINFORCEMENT OF ATTACHMENT 8-27
8.9 PRECAUTIONS FROM BREAKER MANUFACTURERS 8-28
8.10 MULTI-CONTROL VALVE 8-29
8.11 QUICK HITCH 8-31
8.11.1 PROHIBITED WORKS 8-31

Copyright©2022 Kobelco Construction Machinery Co.,Ltd. All rights reserved. [S2LC00054ZE11] [0609CsCshWbYs]

[CONTENTS]

8.11.2 PRECAUTIONS FOR USE 8-32
8.11.3 REMOVING FRONT ATTACHMENT 8-33
8.11.4 INSTALLING FRONT ATTACHMENT 8-34
8.11.5 MANUAL SWITCHING OF PRESSURE REDUCING VALVE FOR QUICK HITCH 8-35

Copyright©2022 Kobelco Construction Machinery Co.,Ltd. All rights reserved. [S2LC00054ZE11] [0609CsCshWbYs]

IMPORTANT INFORMATION

Copyright©2022 Kobelco Construction Machinery Co.,Ltd. All rights reserved. [S2LC00054ZE11] [0609CsCshWbYs]

Copyright©2022 Kobelco Construction Machinery Co.,Ltd. All rights reserved. [S2LC00054ZE11] [0609CsCshWbYs]

PREFACE

- Read, understand and follow the safety messages and instructions in this manual and the safety messages on the machine. If these safety messages are not followed, serious injury or death could occur.
- Always be aware of your surroundings when operating this machine and understand the capabilities of this machine and the attachments.
- Always use caution to safely operate this machine.

WARNING Use of this product and this manual

- Improper operation, lubrication, maintenance or repair of this machine may cause SERIOUS INJURY, DEATH or damage to the machine.
- Do not operate this machine for the first time or perform any inspection, lubrication, maintenance or repair on this machine, until you have carefully read and understand the operation, inspection, lubrication, maintenance, and repair information in this manual.
- For machines equipped with specialized attachments, read the section related to the specialized attachments in this manual and any additional manuals for the specialized attachment.
- If this manual is lost, damaged or unreadable, order a replacement from your KOBELCO authorized dealer.
- This manual is a part of this machine and should be transferred with the machine to new users or owners.
- Always use genuine KOBELCO parts. Do not use aftermarket or non-KOBELCO parts on your machine.
- Manufacturers cannot anticipate every possible scenario and potential hazard that may arise during operation, inspection and maintenance activities. Therefore, the warnings in this manual and on the product may not communicate all of the possible safety precautions for your situation. When performing any operation, inspection and maintenance activities that are not contained in this manual, proceed at your own risk and do not perform any unsafe acts. You should also ensure the machine will not be damaged or create an unsafe condition by your actions. Always follow the safety procedures in this manual and for your worksite. NEVER perform any task or operation prohibited by this manual.
- If a tool, procedure, work method or operating technique not specifically recommended by KOBELCO is used, you must evaluate that it is safe for yourself and others to proceed. You should also ensure the machine will not be damaged or create an unsafe condition by the operation, lubrication, maintenance and/or repair procedures you choose. NEVER perform any task or operation prohibited by this manual.
- The information, specification, and illustrations in this manual are based on information available at the time it was written. KOBELCO may change the specifications, torques, pressures, measurements, adjustments, illustrations, and other content at anytime without any obligation to notify the users/owners of these changes. Your KOBELCO authorized dealer will have the most current information available.
- Should there be questions, errors, omissions or other issues that need to be communicated to the manufacturer, contact your KOBELCO authorized dealer.
- KOBELCO provides machines produced in accordance with regulations and standards of a country in which the machine is sold to the first owner. If you have a machine purchased in a foreign country or from a person or company in another country, your machine may lack safety devices or machine components or not meet a safety standard required in your country. Please contact your KOBELCO authorized dealer to ask whether your machine's specifications meet the regulations and the standards in your country.
- KOBELCO DOES NOT warrant or provide any support for any machine exported to other countries.

The copyright of this manual belongs to KOBELCO CONSTRUCTION MACHINERY CO., LTD. Copy, reproduction, distribution, and delivery (including these actions on the Internet) of all or part of this manual are prohibited without permission of KOBELCO CONSTRUCTION MACHINERY CO., LTD.

Copyright©2022 Kobelco Construction Machinery Co.,Ltd. All rights reserved. [S2LC00054ZE11] [0609CsCshWbYs]

STORE OPERATION & MAINTENANCE MANUALS ON THE MACHINE

Always store all manuals for this machine and any attachments, including this manual and the related manuals, in the pocket located at the rear side of the operator's seat. Check the manuals are in this location as a part of your pre-start Inspection. If the manuals are not found during your pre-start inspection, inform your supervisor and order replacement manuals from your KOBELCO authorized dealer.

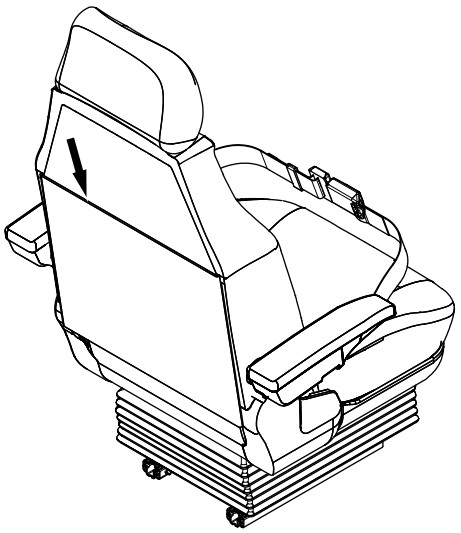

Copyright©2022 Kobelco Construction Machinery Co.,Ltd. All rights reserved. [S2LC00054ZE11] [0609CsCshWbYs]

SAFETY INFORMATION IN MESSAGES OR LABELS IN THIS MANUAL AND ON THE MACHINE

Many accidents are the result of not following basic safety precautions and could have been avoided by recognizing potentially hazardous situations.

Proper risk assessment can prevent many accidents from occurring. During operation, always pay attention to the potential hazards near the machine and at your worksite.

- Improper operation, inspection, maintenance and repair could cause serious injury, death or property damage. Before operating, inspecting and maintaining this machine, carefully read and understand this manual, the related manuals, and any attachment manuals that may be provided to you.
- Only allow trained and experienced personnel to operate, to inspect and to maintain this machine. These individuals must also comply with all applicable employer, industry, and governmental rules, standards, and regulations.

Many safety messages in this manual or on the labels on this machine contain signal words. Signal words are used to identify safety messages and property damage messages and designate a level of hazard seriousness. Many of these safety messages may also contain avoidance information.

⚠ **This safety alert symbol identifies important safety messages in this manual. When you see this symbol, be alert, your safety is involved, carefully read the message that follows, and inform other operators.**

The three signal words are DANGER, WARNING and CAUTION. Each alerts the viewer to the existence and relative seriousness of a hazard. They are reserved for personal injury hazards.
Safety signs identified by DANGER shall be used sparingly and only for those situations presenting the most serious hazards. Hazards identified by WARNING present a lesser degree of risk of injury or death than those identified by DANGER.

⚠ DANGER DANGER indicates a hazard with a high level of risk which, if not avoided, will result in death or serious injury.

⚠ WARNING WARNING indicates a hazard with a medium level of risk which, if not avoided, could result in death or serious injury.

⚠ CAUTION CAUTION indicates a hazard with a low level of risk which, if not avoided, could result in minor or moderate injury.

Other than the above-mentioned signal words, the following words identify important information which must be kept for the protection of the machine and may be helpful for the operator.

Notice Notice indicates information considered important, but not hazard related .
(e.g., messages related to property damage)

Note Note indicates information that may be helpful for the operator.

SAFETY LABELS

Safety labels are affixed to machine to alert the operator and surrounding personnel of hazardous situations during operation, inspection or maintenance.
There are two types of "safety labels" on this machine. One is "SAFETY LABEL INCLUDING SIGNAL WORDS" and the other is "PICTORIAL ONLY SAFETY LABELS".

Copyright©2022 Kobelco Construction Machinery Co.,Ltd. All rights reserved. [S2LC00054ZE11] [0609CsCshWbYs]

Example of the safety label including signal words



Example of a pictorial only safety label

The pictorial only safety label is used to alert the operator and surrounding personnel of potentially hazardous situations.
For pictorial only safety label, the hazard pictorial is in the upper or left box, and the avoidance information is in the lower or right box.

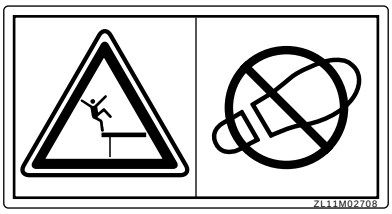

Copyright©2022 Kobelco Construction Machinery Co.,Ltd. All rights reserved. [S2LC00054ZE11] [0609CsCshWbYs]

SUMMARY OF THE MACHINE

APPLICABLE WORKS

Use this machine in the following applications:

- Digging
- Trenching
- Loading
- Leveling
- Demolishing

For details of work procedures, please refer to the chapters of MACHINE OPERATION and OPTIONAL EQUIPMENT.

FRONT & REAR/RIGHT & LEFT OF THE MACHINE

This manual refers to the front, rear, right & left of this machine as seen when sitting in the operator's seat with the machine in the normal travel position. The normal travel position is when the idler wheels are positioned at the front under the cab and the drive sprockets are positioned at the rear.

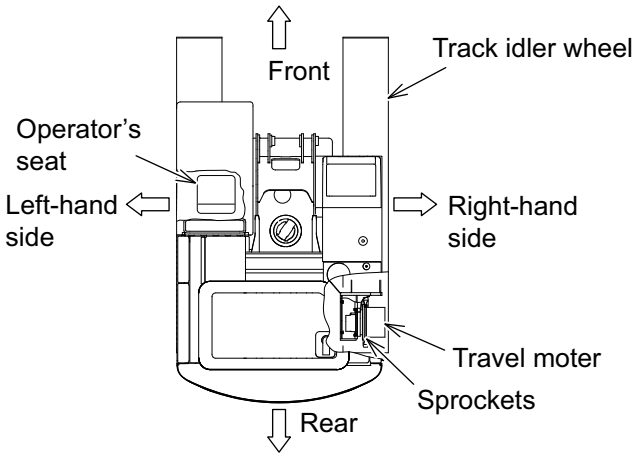

BREAK-IN OPERATION

Prior to shipment, this machine was inspected and adjusted by KOBELCO. Future performance and service life of this machine depends on how the machine is operated during the break-in period.

Hour Meter	Load Status
Less than 10 hours	About 60%
Less than 100 hours	About 80%
100 hours and more	Full load

During the break-in period

- Always sufficiently warm-up the engine and the hydraulic oil.
- Do not operate with loads that exceed the recommended load status for each phase shown in the table or operate at high speeds.
- Do not perform a sudden start, sudden acceleration, or other sudden changes in engine speed.
- Avoid unnecessary sudden stops or sudden changes in driving direction.
- Do not operate the engine at high RPMs for extended periods of time.

Notice

Operating with heavy loads during the first 100 hours of operation may significantly affect the performance and the life of the machine. Use extreme caution if operating with heavy loads during the break-in period.

Copyright©2022 Kobelco Construction Machinery Co.,Ltd. All rights reserved. [S2LC00054ZE11] [0609CsCshWbYs]

QUALIFICATION FOR OPERATING THE MACHINE

Where a license or special qualification is required to operate a hydraulic excavator by law, the operator of this machine is required to have a valid license or qualification.

Copyright©2022 Kobelco Construction Machinery Co.,Ltd. All rights reserved. [S2LC00054ZE11] [0609CsCshWbYs]

CAB WITH ROPS (ROLL-OVER PROTECTIVE STRUCTURE)/ FALLING OBJECTS PROTECTIVE STRUCTURE

When ROPS CERTIFICATION as shown in the illustration is placed inside the cab, that cab is equipped with the roll-over protective structure (ROPS) and the falling objects protective structure (top guard level I). Observe the following to ensure the function of the protective structures.

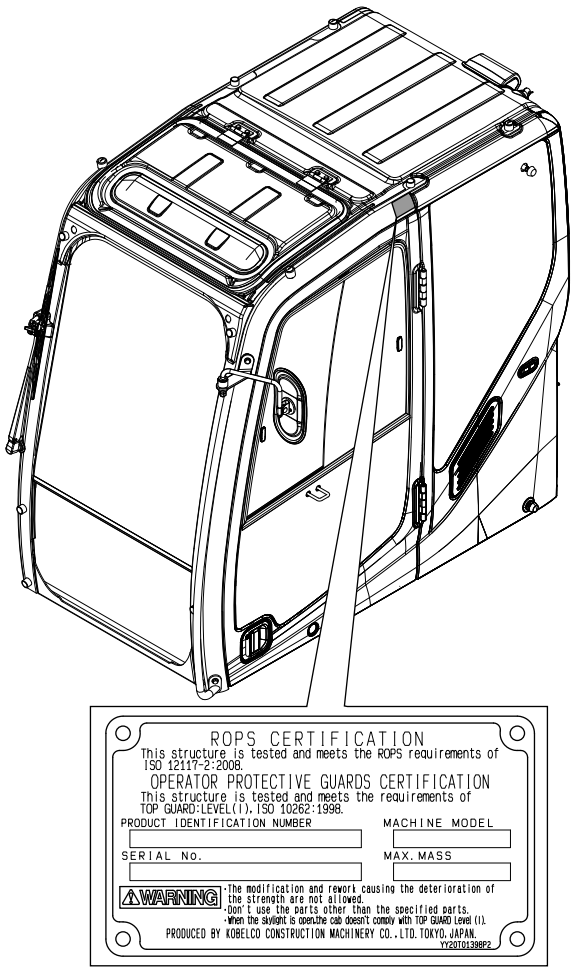

- Do not modify the cab and the protective structures by welding, drilling, or performing other modification on them.
  Even a slight modification can decrease the strength of the protective structures.
- Do not correct or repair the cab and the protective structures without contacting your KOBELCO authorized dealer.
  Ask your KOBELCO authorized dealer for inspection for damages of the cab caused by fire, corrosion, collision, or others.
  The all damaged parts shall be restored by using the genuine parts. For structural changes or part replacements, be sure to ask your KOBELCO authorized dealer.
- Fasten your seat belt during operation.
  The protective structures are designed based on the premise of fastening the seat belt.
  Always fasten your seat belt during operation.
- Pay attention to the operating mass.
  If the operating mass exceeds MAX. MASS (maximum operating mass) described on ROPS CERTIFICATION with the special attachment or others installed, it will cause insufficient protective function, resulting in serious accidents or death when the machine tips/rolls over.

Notice

When the top guard is equipped with OPERATION PROTECTIVE GUARD CERTIFICATION, that cab is equipped with the falling objects protective structure (top guard level II).
When the front guard is equipped with OPERATION PROTECTIVE GUARD CERTIFICATION, that cab is equipped with the flying objects protector (front guard level II).

Copyright©2022 Kobelco Construction Machinery Co.,Ltd. All rights reserved. [S2LC00054ZE11] [0609CsCshWbYs]

ORDERING PARTS AND SERVICE

When ordering parts and service, have the machine serial number, the engine serial number and the current hours of operation available for your KOBELCO authorized dealer.
The machine serial number and the engine serial number are stamped in the locations shown below. For future reference, confirm and record these numbers in the spaces below.

MACHINE TYPE	MACHINE SERIAL No.	ENGINE SERIAL No.	HOUR METER

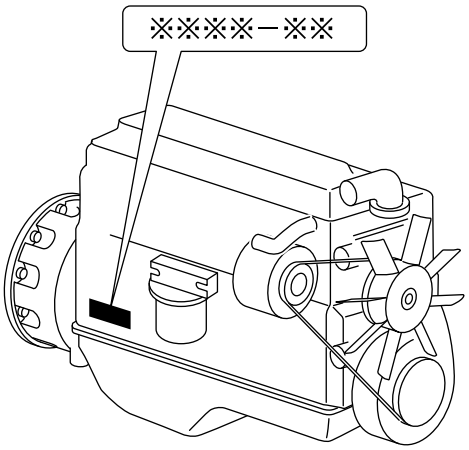

ENGINE SERIAL No.
(”∗”means engine serial number)

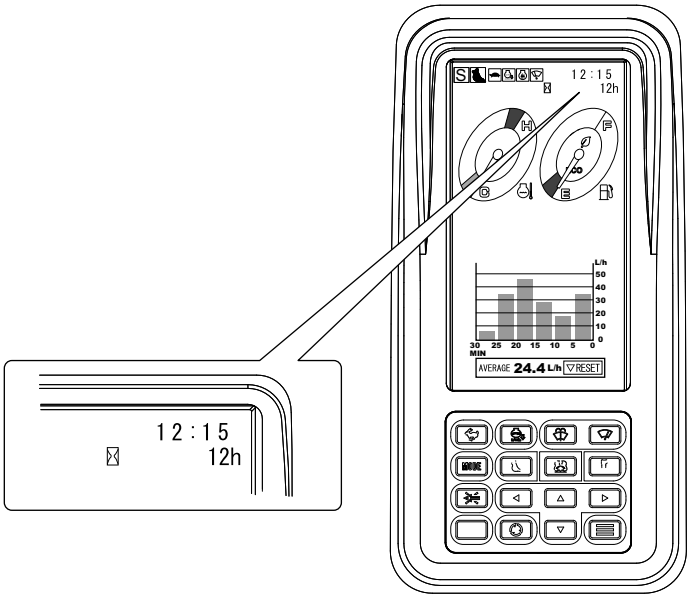

HOUR METER

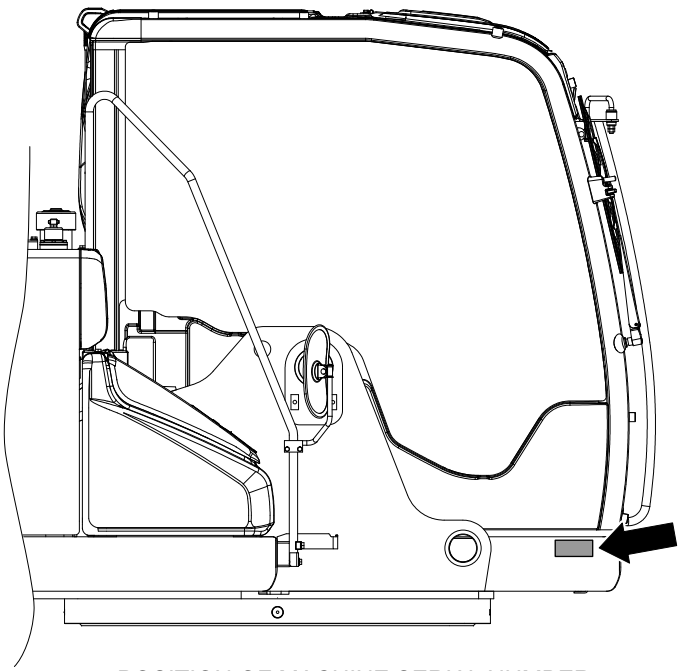

POSITION OF MACHINE SERIAL NUMBER

Copyright©2022 Kobelco Construction Machinery Co.,Ltd. All rights reserved. [S2LC00054ZE11] [0609CsCshWbYs]

WARRANTY

This machine is warranted as per the WARRANTY attached to this machine. In case of any failures are proved to be KOBELCO's responsibility, KOBELCO will repair or replace any parts or components for free of charge to the extent specified in the attached WARRANTY. KOBELCO shall not be liable for any improper operation, maintenance, modification, and alteration etc., other than described in this manual.

Copyright©2022 Kobelco Construction Machinery Co.,Ltd. All rights reserved. [S2LC00054ZE11] [0609CsCshWbYs]

IMPORTANT NOTIFICATION

To show additional detail of parts and components or show motion of this machine, some illustrations may show the machine with safety related parts and components, including guards, doors, covers and shields, either removed or not in place. To prevent serious injury, death, or property damage, all of the safety related parts and components must be properly installed and secured, before starting this machine.
In addition, some illustrations may show features or functions that differ from your machine.
questions, contact your KOBELCO authorized dealer.

Example
This illustration shows the battery with the cover removed.

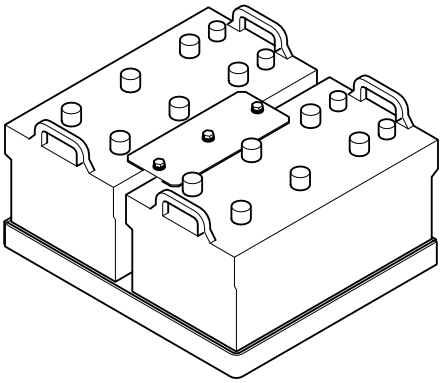

Copyright©2022 Kobelco Construction Machinery Co.,Ltd. All rights reserved. [S2LC00054ZE11] [0609CsCshWbYs]

1. SAFETY PRECAUTIONS

Copyright©2022 Kobelco Construction Machinery Co.,Ltd. All rights reserved. [S2LC00054ZE11] [0609CsCshWbYs]

Copyright©2022 Kobelco Construction Machinery Co.,Ltd. All rights reserved. [S2LC00054ZE11] [0609CsCshWbYs]

1.1 SAFETY LABELS & DECALS

SAFETY MESSAGES

Several labels for specific safety messages are attached to this machine. The exact location and description of the hazards are reviewed in this section.
Please read and understand all safety messages in this manual and on the machine.

⚠WARNING READ THE OPERATOR'S MANUAL

Read, understand and follow the safety messages and instructions in this manual. If these safety messages are not followed, serious injury or death could occur.

1.1.1 ALWAYS MAKE SURE ALL OF THE SAFETY LABELS ARE LEGIBLE AND NOT DAMAGED

- Clean the safety labels or replace the safety labels if you can not read the words or see the illustrations.
  To clean the safety labels, only use a cloth, water and soap. Do not use any solvent, gasoline or other harsh chemicals to clean the safety labels. Solvents, gasoline or harsh chemicals could loosen the adhesive that secures the safety labels and allow the label to fall off the machine.
- Always replace any safety label that is damaged or missing. If a safety label is attached to a part that is replaced, you will need to install a safety label on the replacement part. Your KOBELCO authorized dealer can provide new safety labels.
- Never remove any safety labels attached to this machine. As for the labels other than shown below, treat them in the same ways as the above mentioned.

Copyright©2022 Kobelco Construction Machinery Co.,Ltd. All rights reserved. [S2LC00054ZE11] [0609CsCshWbYs]

1.1.2 LOCATION OF SAFETY LABELS & DECALS

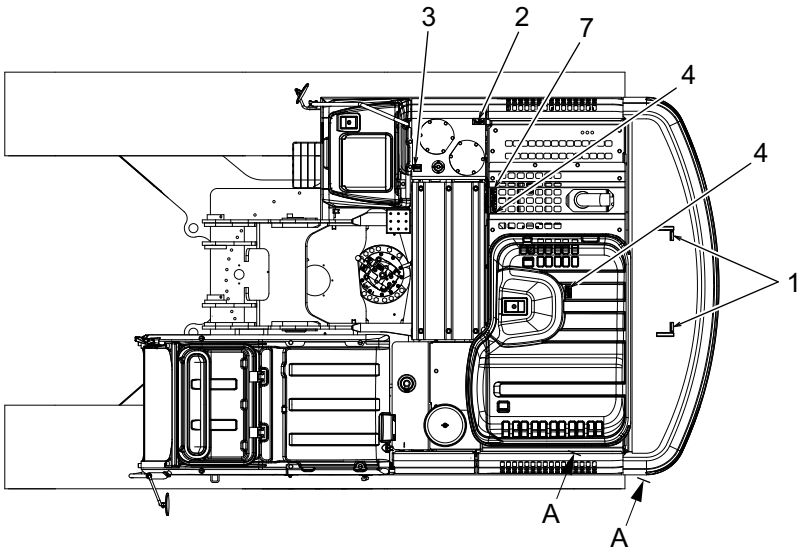

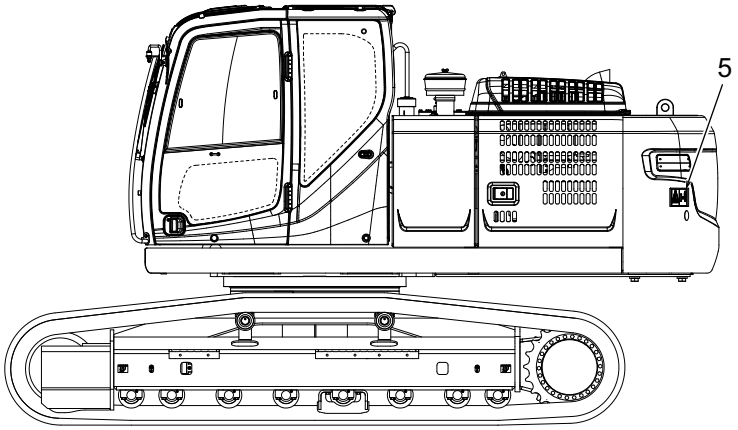

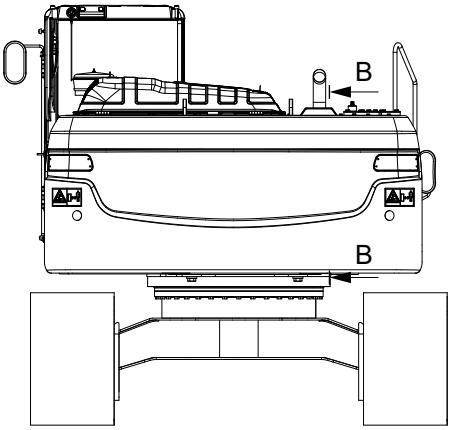

Copyright©2022 Kobelco Construction Machinery Co.,Ltd. All rights reserved. [S2LC00054ZE11] [0609CsCshWbYs]

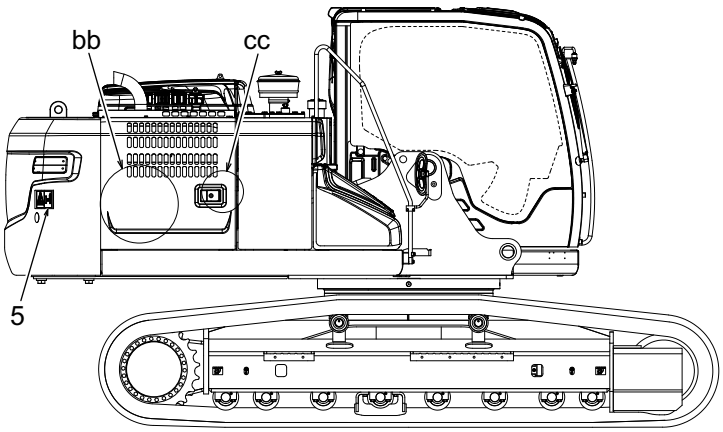

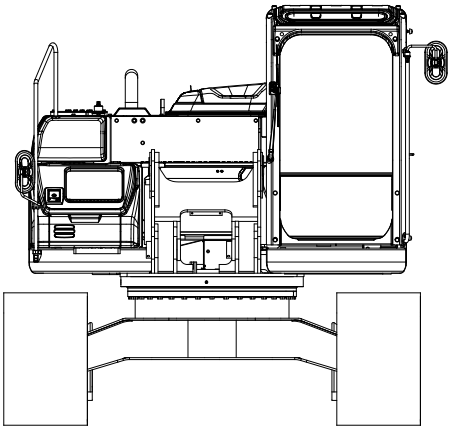

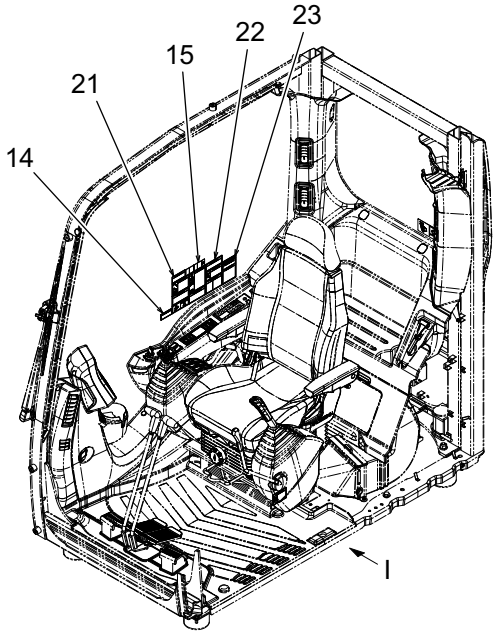

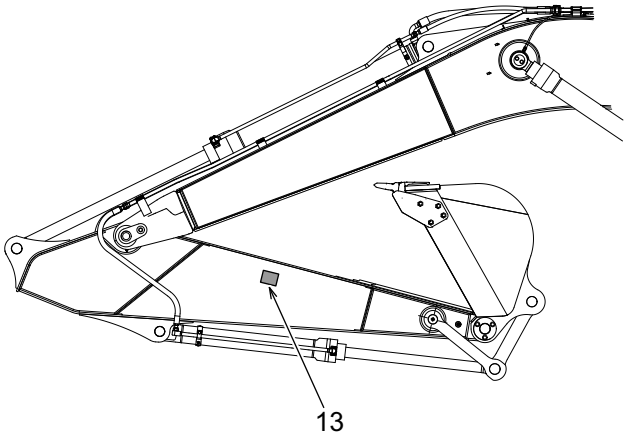

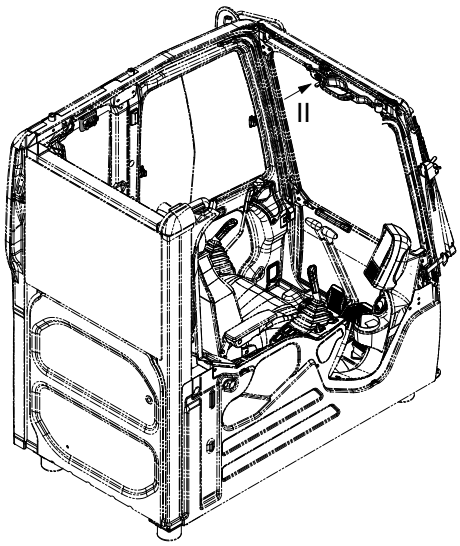

Copyright©2022 Kobelco Construction Machinery Co.,Ltd. All rights reserved. [S2LC00054ZE11] [0609CsCshWbYs]

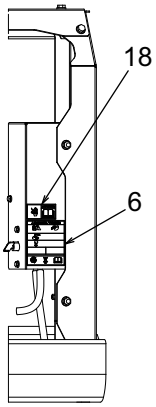

SECTION AA

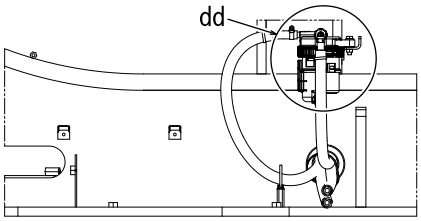

SECTION BB

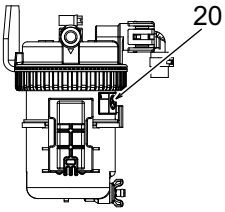

DETAIL dd

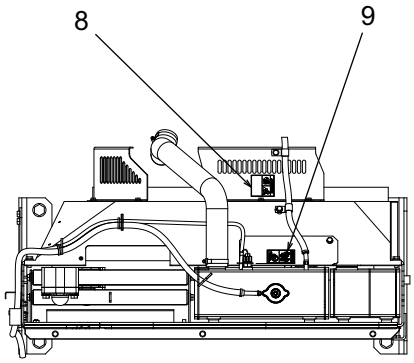

DETAIL aa

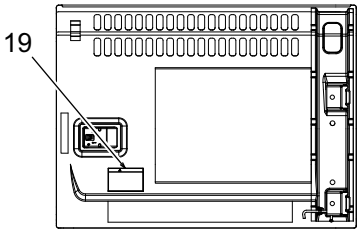

DETAIL bb
SHOW INSIDE OF PANEL

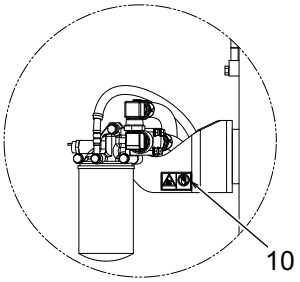

DETAIL cc

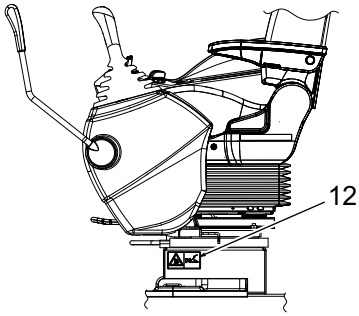

VIEW I

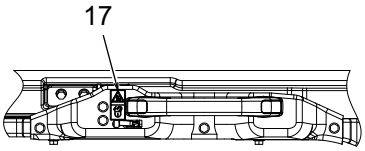

VIEW II

Copyright©2022 Kobelco Construction Machinery Co.,Ltd. All rights reserved. [S2LC00054ZE11] [0609CsCshWbYs]

1.1.3 SAFETY LABELS

DO NOT USE COUNTERWEIGHT LIFTING EYES

Location:1
Part Number:YN20T02741P1



WORKING ABOVE GROUND

Location:2
Part Number:YN20T02743P1



There is a danger of falling when working on areas above ground.

- Do not approach edges.
- Use the appropriate equipment, such as ladders or platform when working above ground. In addition, strap yourself to the proper equipment accordingly.
- Avoid spillage of any oil or grease.
- Clean all slippery substances such as grease, oil, hydraulic oil, mud, ice, and others attached to the steps, handrails, crawlers, ladders, and platforms.
- Do not leave any tools around the working area.
- Use extreme caution to avoid slipping while walking.
- Do not jump on or from the machine. Use the steps and handrails and securely maintain a three point contact while mounting or dismounting at all times.

PRESSURIZED HOT OIL

Location:3
Part Number:YN20T02744P1



Copyright©2022 Kobelco Construction Machinery Co.,Ltd. All rights reserved. [S2LC00054ZE11] [0609CsCshWbYs]

WORKING ABOVE GROUND

Location:4
Part Number:YN20T02745P1



There is a danger of falling when working on areas above ground.

- Do not approach edges.
- Use the appropriate equipment, such as ladders or platform when working above ground. In addition, strap yourself to the proper equipment accordingly.
- Avoid spillage of any oil or grease.
- Clean all slippery substances such as grease, oil, hydraulic oil, mud, ice, and others attached to the steps, handrails, crawlers, ladders, and platforms.
- Do not leave any tools around the working area.
- Use extreme caution to avoid slipping while walking.
- Do not jump on or from the machine. Use the steps and handrails and securely maintain a three point contact while mounting or dismounting at all times.

SWING

Location:5
Part Number:YN20T02742P1

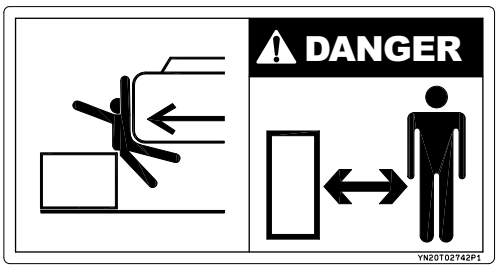

Do not enter in the swing area.
Stay away from the machine during operation to prevent you from contacting with or being crushed between machine components.

HANDLING BATTERY

Location:6
Part Number:YN20T02746P1

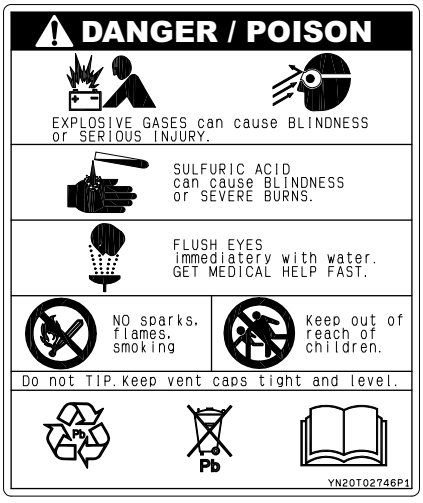

HOT PARTS

Location:7
Part Number:YN20T02749P1



Copyright©2022 Kobelco Construction Machinery Co.,Ltd. All rights reserved. [S2LC00054ZE11] [0609CsCshWbYs]

ENGINE ROTATING PARTS WARNING

Location:8
Part Number:YN20T02748P1



HOT COOLANT

Location:9
Part Number:YN20T02747P1
Never loosen or open the radiator cap when coolant is hot. Stream of hot coolant will spout and could cause burns.
Before opening the radiator cap:

- Cool down the engine completely.
- Cover the radiator with cloth rag.
- Loosen the cap slowly to relieve pressure.

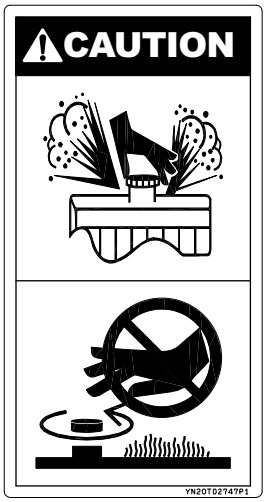

HOT PARTS

Location:10
Part Number:YN20T02750P1

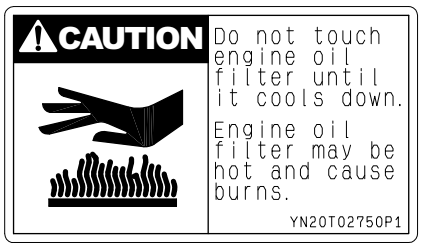

FUEL TANK LIFTING

Location:11
Part Number:YN20T02753P1

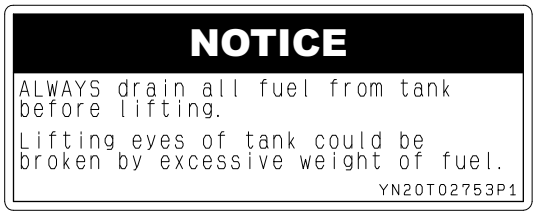

Copyright©2022 Kobelco Construction Machinery Co.,Ltd. All rights reserved. [S2LC00054ZE11] [0609CsCshWbYs]

DO NOT INSERT HAND IN THE MOVING PART

Location:12
Part Number:YN20T02763P1

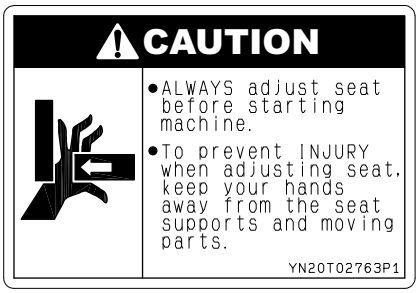

KEEP CLEAR WORKING AREA

Location:13
Part Number:YN20T02739P1
Make sure the area is clear of obstacles and persons before beginning the operation of the machine.
Always look around before you start the swing operation. Make sure everyone is cleared in your worksite. Sound horn before beginning swing operation.

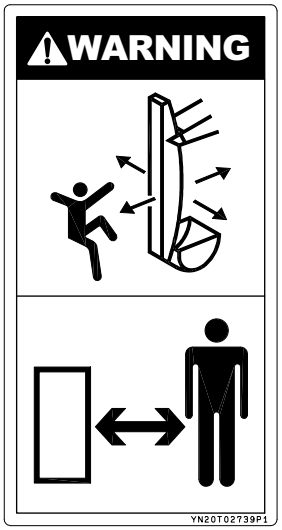

ATTACHMENT MODE SELECT SWITCH

Location:14
Part Number:YN20T02766P1

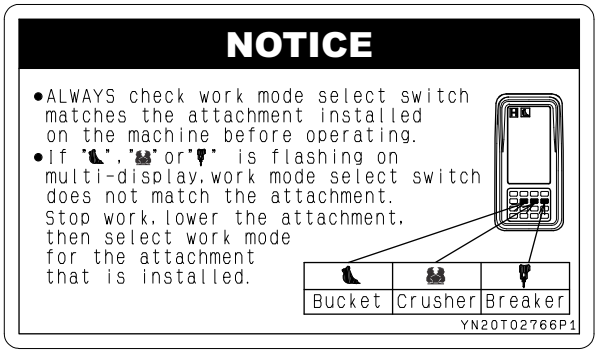

Copyright©2022 Kobelco Construction Machinery Co.,Ltd. All rights reserved. [S2LC00054ZE11] [0609CsCshWbYs]

SAFETY PRECAUTIONS

Location:15
Part Number:YN20T02727P2

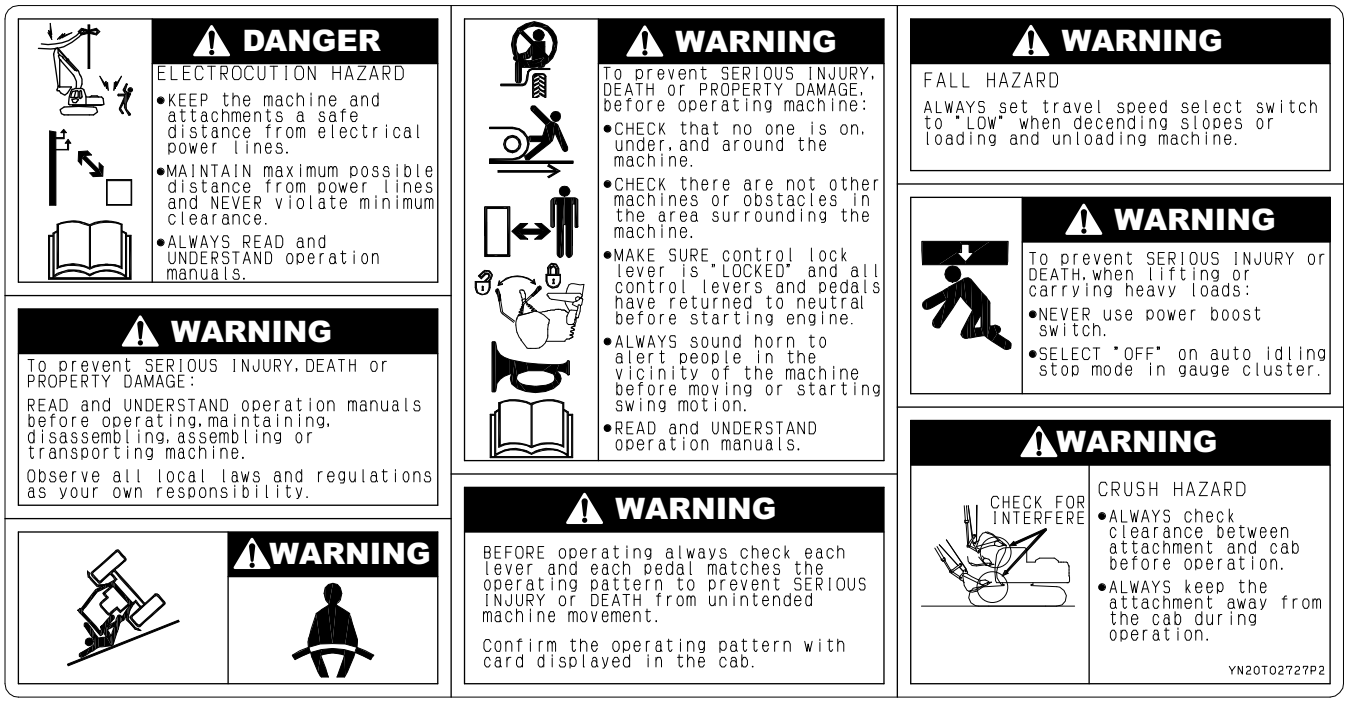

ROTARY MULTI CONTROL VALVE

Location:16
Part Number:YN20T02815P1

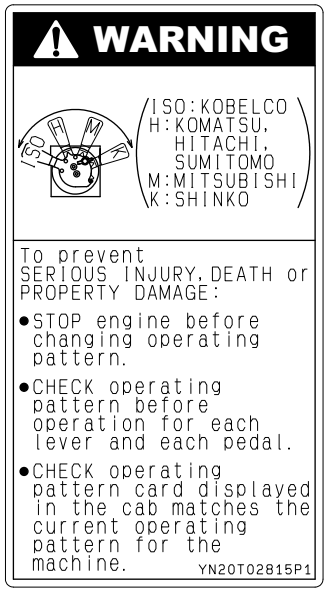

Copyright©2022 Kobelco Construction Machinery Co.,Ltd. All rights reserved. [S2LC00054ZE11] [0609CsCshWbYs]

LOCK THE FRONT WINDOW AT THE OPENING POSITION

Location:17
Part Number:YN20T02764P1
Lock the front window at the opening position securely, or it may slip down and may personal injury.

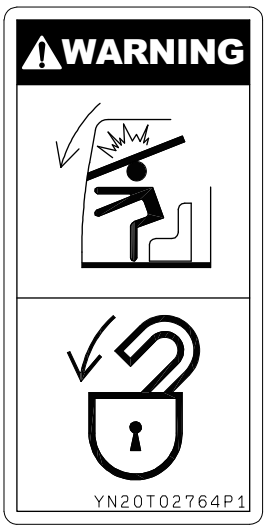

BATTERY CABLE

Location:18
Part Number:YN20T02761P1
Electric hazard may cause injury when mishandling the cable.
Read operator manual for safe and proper handling.

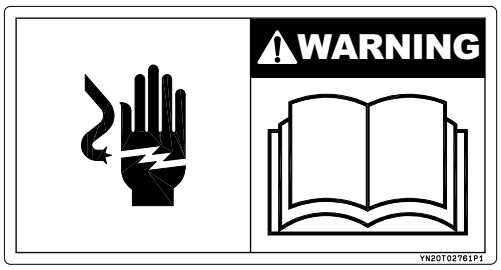

PRECAUTIONS FOR FILTER REPLACEMENT

Location:19
Part Number:YN20T02813P1

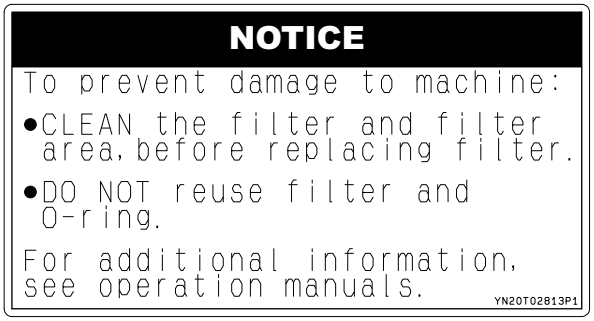

DO NOT REMOVE FILTER (ON CENTER SECTION OF MACHINE)

Location:20
Part Number:YN20T02814P1



Copyright©2022 Kobelco Construction Machinery Co.,Ltd. All rights reserved. [S2LC00054ZE11] [0609CsCshWbYs]

HANDLING THE QUICK HITCH

Location:21
Part Number:YY20T01577P1

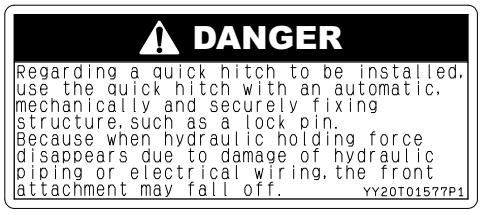

PRECAUTIONS OF HANDLING QUICK HITCH

Location:22
Part Number:YY20T01578P1

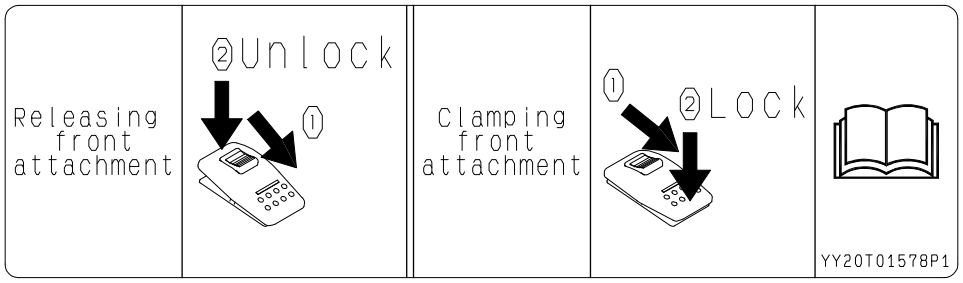

Copyright©2022 Kobelco Construction Machinery Co.,Ltd. All rights reserved. [S2LC00054ZE11] [0609CsCshWbYs]

1.2 PRE-START SAFETY

1.2.1 OPERATION RULES

ALWAYS OBSERVE BASIC SAFETY RULES AND PRECAUTIONS

All operators are required to receive training before operating this machine.
If a license or other special qualification is required to operate a demolition machine in the country where this machine will be operated, all operators of this machine must meet those requirements and have a valid (not expired) license or qualification.

- Follow all safety precautions and procedures described in this manual while operating, inspecting and maintaining this machine.
- Never operate this machine if you are under the influence of drugs (including those which may make you drowsy) or alcohol. If you are not alert, do not operate the machine.
- To prevent accidents, confirm all working procedures before starting work. If a signal person is needed, Always agree on the hand signals and designate a signal person before starting work.
  All personnel must know and understand all the signals. The operator shall respond to signals only from the appointed signal person, but shall obey a stop signal from anyone at any time. The signal person must stand in a clearly visible location when giving the signals.

ENSURE WORKSITE SAFETY

Conduct risk assessment with the site manager on each work and confirm that all necessary safety measures are taken.
For example, confirm whether following safety measures and checks are taken.

- Carefully survey quality of the layer of earth and soil in the work site before operating the machine to establish safety working procedures.
- Choose the place where landslide or rock fall will not occur.
- Put up barricades to make the work area off-limit to unauthorized personnel.
  Especially when working on the road, place the signal person to secure safety for both driving cars and pedestrians.

KEEP AWAY FROM THE MACHINE AND ATTACHMENT DURING OPERATION

Fall hazard. To prevent serious injury or death.

- Never allow anyone to stand on the machine, including the attachment and the upper structure, when operating.
- Never allow anyone to stand or to ride on a suspended load or the attachment.

OPTIONAL EQUIPMENT/ATTACHMENT

Use only KOBELCO equipment and attachments or equipment and attachments approved for use by KOBELCO.

- Use of unapproved equipment or attachments may cause serious injury, death, or damage to the machine and the attachment, including reducing the life of the machine.
- The use of unapproved attachments voids KOBELCO's liability for the machine.
- Always read, understand and follow the instructions both in this manual and the manual for the attachment.
- Consult your KOBELCO authorized dealer about which attachments are approved for use on your machine before connecting an attachment to your machine.

Copyright©2022 Kobelco Construction Machinery Co.,Ltd. All rights reserved. [S2LC00054ZE11] [0609CsCshWbYs]

1.2.2 PROTECTION TOOLS

PERSONAL PROTECTIVE EQUIPMENT

Wear Fitted Clothing and Protective Gear
To prevent serious injury or death, always change any clothing that has become contaminated with oil, fuel or other flammable substances.

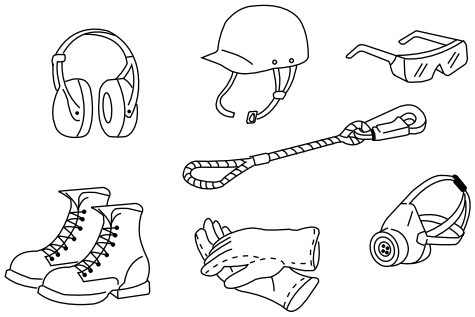

- Do not wear loose fitting clothing, jewelry or any accessory and restrain long hair that can get caught in moving parts or that can catch on controls and result in unintended movement of the machine or the attachment.
- Always wear the proper personal protective equipment for the task you will be performing. This may include a hard hat, safety shoes, safety glasses, face shield, respirator, gloves, ear protection, and/or a reflective vest. Consult with your supervisor to confirm you have the proper personal protective equipment for the task.
- Use ear protection when operating in noisy areas. Prolonged exposure to loud noises can cause hearing damage and even total hearing loss.
- Inspect all personal protective equipment for damage prior to use. If any personal protective equipment is damaged, or past its expiration date, do not use the equipment and contact your supervisor to obtain a replacement before operating machine.
- Other personnel working in the vicinity of the machine, including the signal person, should also wear the proper personal protective equipment appropriate for the worksite and for the task.
  This may include a hard hat, safety shoes, safety glasses, face shield, respirator, gloves, ear protection, and/or a reflective vest. Consult with your supervisor to confirm that personnel working in the vicinity of the machine have the proper personal protective equipment for the worksite and the task.

PREPARE FOR EMERGENCY

In case of emergency, know where the fire extinguishers and the first aid kit are located.

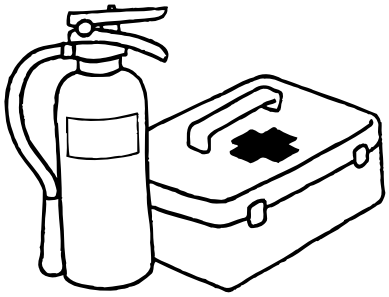

- Know how to use a fire extinguisher.
- Inspect and maintain the fire extinguishers in compliance with your local/national regulations.
- Determine what emergency communication devices are necessary for your location and have a list of important telephone numbers available.
- Periodically inspect the first aid kit. Replenish items and replace expired items as necessary.

Copyright©2022 Kobelco Construction Machinery Co.,Ltd. All rights reserved. [S2LC00054ZE11] [0609CsCshWbYs]

1.2.3 ABNORMAL AND EMERGENCY CONDITION

WHEN A FAILURE IS FOUND

When operating, inspecting or maintaining the machine, if there is an unusual noise, vibration, smell, instrument malfunction, smoke, oil leak, a warning light illuminates or a warning is on the multi-display, do not continue to operate the machine.

- Always park on a firm, level location, lower the attachment to the ground, stop the engine, pull the pilot control shut-off lever to the locked position, and remove the key.
- Contact your Supervisor.
- Contact your KOBELCO authorized dealer for repair.

EMERGENCY ESCAPE FROM THE CAB

If the normal operator's exit is blocked in an emergency, stop the engine, use the life hammer to break a window, and exit the cab.

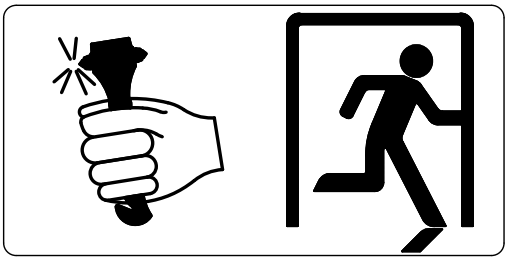

IN THE EVENT OF A FIRE OR OTHER EMERGENCY

- Stop the engine.
- Use hand rails and steps to dismount machine. Do not jump from machine.

Copyright©2022 Kobelco Construction Machinery Co.,Ltd. All rights reserved. [S2LC00054ZE11] [0609CsCshWbYs]

1.2.4 POTENTIAL HAZARDS WHEN OPERATING

PAY ATTENTION TO FALLING MATERIALS AND FLYING DEBRIS

To prevent serious injury or death, confirm the appropriate cab guards are installed for your task and for the attachment /equipment prior to operation. If needed, contact your KOBELCO authorized dealer before starting work.

- Always use the front guard, and the top guard when performing building demolition work or operating at working sites (including mining or quarry sites) where falling material and flying debris may occur.
- If working with the hydraulic breaker or another attachment and if objects will not fall on the machine, only the front guard may be needed.
- When performing work that may result in falling material and flying debris, keep people a safe distance away from the work area.
- Always close the front window and doors before operating.

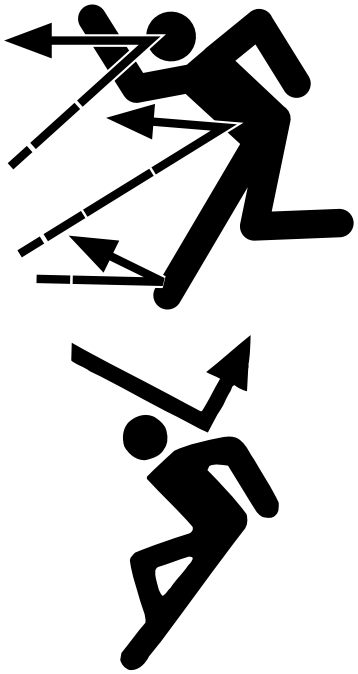

CHECK SAFETY RELATED GUARDS AND EQUIPMENT

- Check all safety related guards, covers, windows and mirrors are not damaged and secure prior to operation. If any damage or other issue is found, do not use the machine until the safety related parts and equipment has been replaced. Never attempt to repair safety related parts and equipment.
- Understand how the safety systems and the safety related equipment protects you as the operator and others around the machine.
- Never remove safety related parts and equipment from the machine.

LIMITED PROTECTION FROM OBJECTS FALLING ON THE CAB

When operating near areas where landslides may occur or where rocks or other debris may fall, be aware that the cab and the guards installed provide limited protection for the operator and may not prevent serious injury or death.

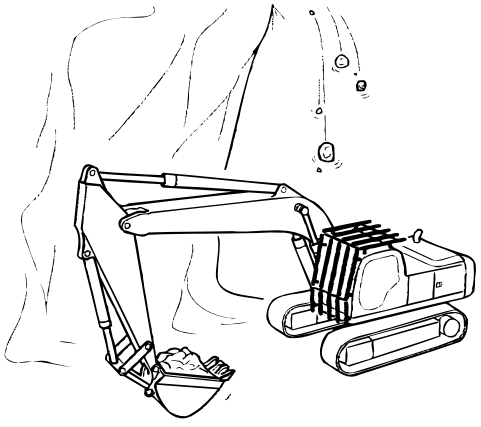

- Never weld, drill or modify the top guard or other protective structures. Any modification could weaken the structural integrity of these protective structures, resulting in serious injury or death in case of collision, falling objects or landslides.
- Do not install any cab lifting device to the top guard or other protective structures.
- If an accident occurs, do not try to straighten or repair the top guard or other protective structures. Contact your KOBELCO authorized dealer for functional verification or replacement of any of the protective structures.

Copyright©2022 Kobelco Construction Machinery Co.,Ltd. All rights reserved. [S2LC00054ZE11] [0609CsCshWbYs]

1.2.5 FIRE PREVENTION

FIRE CAUSED BY FLAMMABLE SUBSTANCES

Fuel, oil, electrolyte, antifreeze/coolant, windshield washer fluid and other chemicals are flammable.
To prevent serious injury or death from possible fire:

- Remove flammables such as leaves, wooden debris, paper waste, etc. from the areas of exhaust manifold, muffler, battery, and undercover, etc.
- Do not smoke or bring other ignition sources near areas where flammables are stored and/or handled.
- Refuel only after stopping the engine.
- Do not leave the machine when refueling or when refilling with oil.
- Try not to spill fuel on heated surfaces or on electrical parts. Clean any spills immediately.
- After refueling or refilling with oil, securely tighten the fuel and the oil caps and clean up any spills immediately.



- Store fuel and oil in designated areas and restrict access to only authorized personnel.
- Remove all flammable materials in the area before performing grinding or welding work.
- Do not weld or perform gas cutting on pipes and tubes which contain combustible liquids.
- Only use nonflammable oils to wash parts. Do not use flammable oils, such as diesel fuel or gasoline, to wash parts.

FIRE CAUSED BY THE ELECTRIC SYSTEM

Short-circuits in the electrical system may cause fire.

- Check all wiring harness connections are clean and secure.
- Inspect wiring harnesses, connectors, and clamps periodically. Repair, replace, or tighten connectors and clamps if any damage or loose connections are found.

FIRE CAUSED BY LEAK

Check all clamps, guards, protective cushions for the hoses and the tubes are secure.
During operation, machine vibration may cause loose hoses or loose tubes to be damaged from contact with other parts and leak high pressure oil or other fluids and result in a fire and serious injury or death.
If any issue is found, immediately tighten, repair or replace it.
Do not operate machine with damaged or bent hoses or tubes.

USE ANTI-EXPLOSION WORK LIGHTS

Use only work lights with anti-explosion specification to prevent serious injury or death.
Lighting must meet the requirements for areas where explosive concentrations of vapors and dusts could exist to prevent a fire or explosion when performing inspection and maintenance activities.

Copyright©2022 Kobelco Construction Machinery Co.,Ltd. All rights reserved. [S2LC00054ZE11] [0609CsCshWbYs]

1.2.6 GETTING ON AND OFF THE MACHINE

PRECAUTIONS OF GETTING ON AND OFF THE MACHINE

Fall hazard. To prevent serious injury or death.

- Always use the step and handrails to get on and off the machine.
- Always face the machine and maintain three points of contact with the steps and handrails.
- Inspect the steps and handrails for damage or loose parts. Replace any damaged parts and tighten any loose bolts or nuts.
- Clean all grease, oil, mud, and other substances from the steps and handrails before use and clean all spills immediately.
- Do not use the pilot control shut-off lever or control levers as hand holds.
- Do not have anything in your hands, including tools, when getting on and off the machine.
- Never jump off the machine or attempt to get on or off a moving machine.

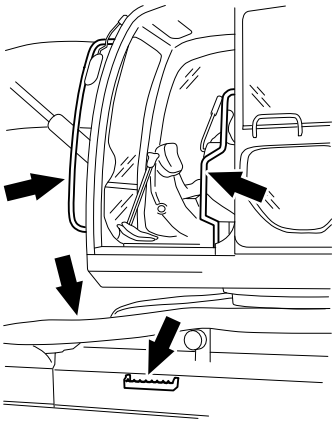



ALWAYS REMAIN SEATED DURING TRAVEL AND OPERATION

Always pull pilot control shut-off lever to the "LOCKED" (up) position and check all control levers and pedals have returned to neutral before leaving the operator's seat.
If not locked, incidental contact with the control levers, pedals and other control devices may result in unexpected and unintended machine movement.

A:LOCKED Position

B:UNLOCKED Position

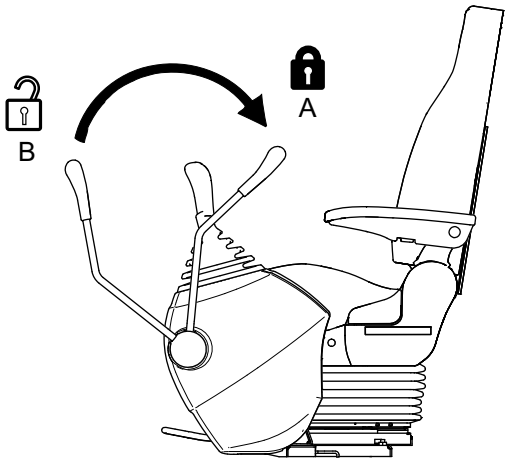

Copyright©2022 Kobelco Construction Machinery Co.,Ltd. All rights reserved. [S2LC00054ZE11] [0609CsCshWbYs]

1.2.7 INSPECTION AND MAINTENANCE ON THE MACHINE

PRE-START INSPECTION

Always perform a pre-startup inspection before operating this machine to check for any potential issues.
For more information, refer to the maintenance section of this manual.

ATTACH A "DO NOT OPERATE" TAG

To prevent serious injury or death, never allow unauthorized personnel to start the engine or touch the control levers during inspection and maintenance activities. Always lower the attachment, pull the pilot control shut-off lever up, stop the engine, and remove the key before performing maintenance.
Use a temporary hang tag to communicate that the machine is out of service. You many need to use more than one temporary hang tag depending on the inspection and maintenance activities to be performed.

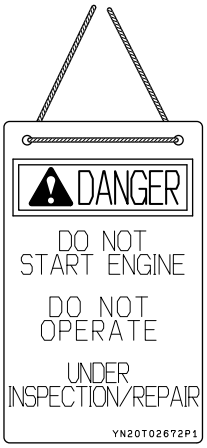

ALWAYS KEEP THE MACHINE CLEAN

Always keep the machine clean and free of scattered debris, and spilled lubricant and oil.
If electrical components or systems get wet, then equipment malfunction, short circuit, or fire may result in serious injury or death.
Never use pressurized water or steam to clean inside the operator cab or any electrical components, such as sensors and connectors.

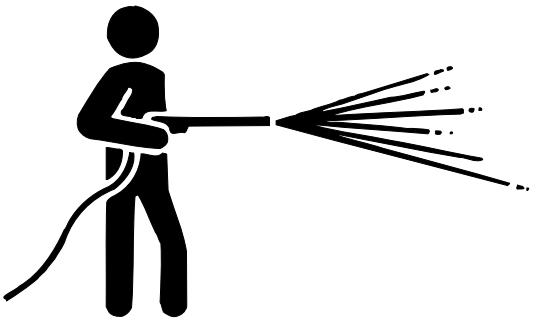

KEEP INSIDE OF OPERATOR CAB CLEAN

- To prevent slippery pedals, always remove mud, grease, oil, and other substances from the soles of your shoes before entering the cab.
- Secure parts and tools inside the cab before operating.
- Do not use your mobile phone, listen to the radio, or use headphones during machine travel or operation.

To prevent fire:

- Do not bring explosive or combustible materials into the cab.
- Do not leave your cigarette lighter inside the cab.
  If the cab temperature becomes too hot, the lighter may explode.
- After smoking, always put out your cigarette and shut the ashtray lid.
- Do not leave plastic bottles inside the cab or attach suction cups to the windows.
  These items may act as lenses and could start a fire.

SEAT BELT INSPECTION

Check if seatbelt is cut or frayed and check if mounting hardware is damaged or loose before fastening the seatbelt. If an issue is found with the seatbelt or the mounting hardware, do not use machine until the issue has been repaired.
Replace seatbelts every 3 (three) years or more frequently if damaged or frayed.

Copyright©2022 Kobelco Construction Machinery Co.,Ltd. All rights reserved. [S2LC00054ZE11] [0609CsCshWbYs]

1.3 SECURE VISIBILITY

1.3.1 BE AWARE OF YOUR SURROUNDINGS

When operating or traveling in the machine, the operator may not observe people and obstacles near the machine. To prevent serious injury, death or damage to the machine.

- Adjust the mirrors for maximum visibility around the machine before operating. If needed, clean the mirrors.
- If your machine is equipped with rearview cameras (option), clean the lenses as needed before operating.
- Move the arm and attachment as needed to improve visibility of the right side during machine travel.
- If needed, use a signal person. The operator should always be alert and follow the signals from the signal person. The operator shall respond to signals only from the appointed signal person, but shall obey a stop signal from anyone at any time.
- When operating in dark locations, turn on the work light. Additional lighting may be needed to illuminate the work area.
- Stop work if you have poor or limited visibility because of darkness, fog, rain, especially lightning, snow, or other causes.
- Fall hazard. Never attach mirrors or other equipment to the handrails of the cab entrance. Over time, excessive vibration may weaken the handrail and cause it to fail.
- If there is an issue with the rearview cameras (option) or the display screen, contact your KOBELCO authorized dealer for repair.
- Do not remove or disassemble the rearview camera and the side camera systems.
  The camera systems are installed on the base machine according to ISO 16001:2017. When removal or disassembly of them is required, contact your KOBELCO authorized dealer otherwise it may void the machine warranty.

Copyright©2022 Kobelco Construction Machinery Co.,Ltd. All rights reserved. [S2LC00054ZE11] [0609CsCshWbYs]

1.4 PRECAUTIONS FOR OPERATION

1.4.1 STARTING

CHECK A "DO NOT OPERATE" TAG

Before starting the engine, check display of warning tags.
If warning tags are displayed, do not start the engine.
The warning tags are used to notify that the machine is in an inoperable condition.
Report this situation to a supervisor of the machine and do not start the engine until the warning tags are removed.



ONLY THE OPERATOR IS ALLOWED IN THE CAB

The operator is the only person that should be on or near the machine and in the cab. Do not allow any other personnel to be present in the cab or on the machine.

CHECK WORKING SITE AND SET UP BARRICADES

To prevent serious injury, death and property damage, before you start the engine and before you move the machine:

- Check that no one is on, under, and around the machine. Make sure that all personnel are clear of the machine and surrounding area.
- Check there are no other machines or obstacles in the area surrounding the machine.
- Set up barricades to prevent unauthorized personnel and / or machines from entering the working site.

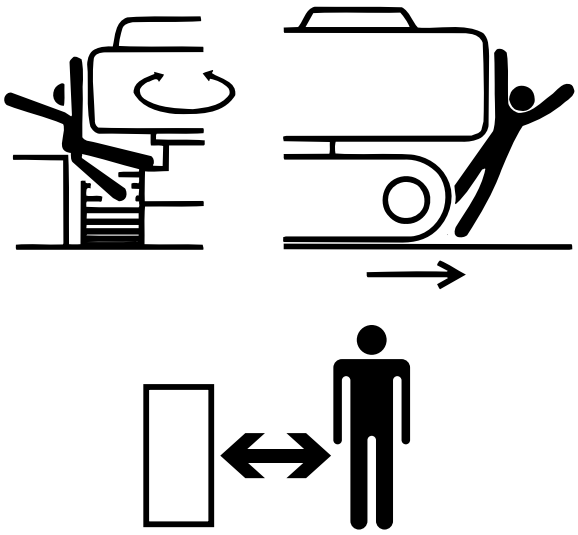

PRE-OPERATION SAFETY CHECK

To prevent serious injury or death, before operating:

- Close and lock the doors and windows. The window guard may not prevent flying debris from striking the operator inside the cab.
- Adjust mirrors for maximum visibility around the machine. See "ADJUSTMENT OF MIRRORS" in Chapter 3 for additional information.
- Check the horn and the travel alarm (if equipped) function properly.

Copyright©2022 Kobelco Construction Machinery Co.,Ltd. All rights reserved. [S2LC00054ZE11] [0609CsCshWbYs]

FASTEN YOUR SEATBELT

To prevent serious injury or death, always fasten your seatbelt before starting the machine and keep your seatbelt fastened during operation.
Sit in operator's seat and adjust seat so you can properly operate all of the machine controls.

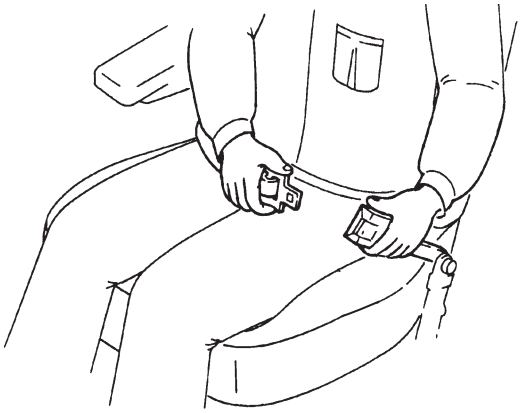

BEFORE STARTING ENGINE

- Check the pilot control shut-off lever is in the "LOCKED" (up) position.
  If not locked, incidental contact with the control levers, pedals and other control devices may result in unexpected and unintended machine movement.
- Confirm that all control levers have returned to neutral.
- Sound horn to alert personnel near the machine.
- Always be seated in the operator's seat with your seatbelt fastened.

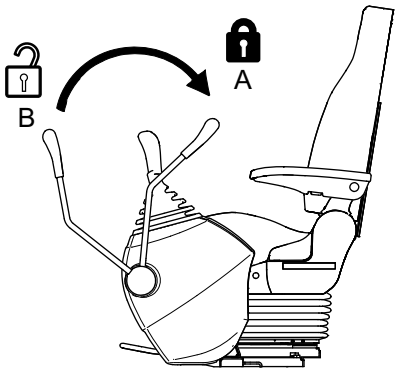

A: Locked Position

B: Unlocked Position

Only start the engine from the operator's seat. Never attempt to start the engine by connecting the starter terminals to the batteries.
Unexpected machine movement could result in serious injury, death, or damage to the machine and electrical system.

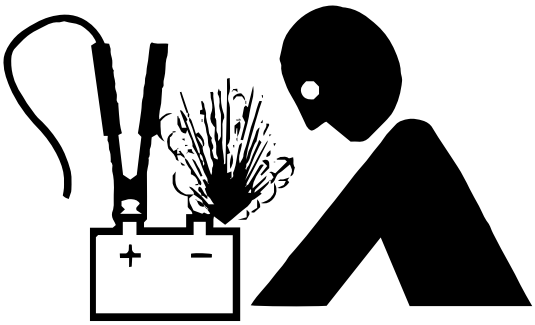

WARM UP

To prevent serious injury or death, always allow the machine to warm up prior to operation, especially in cold weather. Do not start operation as soon as the engine is started. If not warmed up, there could be a delay between when the control levers are moved and when the machine or the attachment /equipment responds, resulting in unintended or unexpected movement of the machine or attachment /equipment.

Copyright©2022 Kobelco Construction Machinery Co.,Ltd. All rights reserved. [S2LC00054ZE11] [0609CsCshWbYs]

ATTACHMENT MODE SELECT SWITCH

This machine has 3 attachment modes: "Bucket", "Crusher" and "Breaker".
Check the attachment installed matches the selected attachment mode and is appropriate for the task to be performed. If the attachment mode selected does not match the attachment, the machine will not work properly and it will result in serious injury, death, or property damage.
See "SWITCHING ATTACHMENT MODE" in Chapter 3 for additional information.

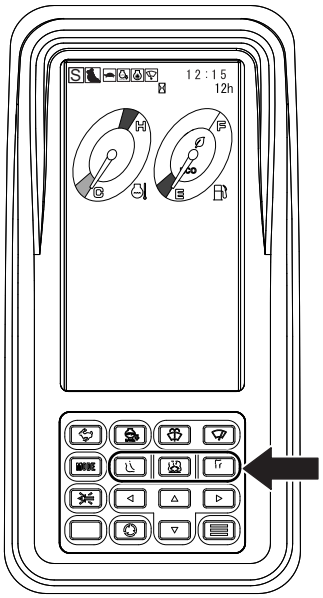

CHECK CONTROL PATTERN BEFORE OPERATING

Before operation, always check the operation of each control lever and each pedal.
If the movement of the machine does not match the control pattern selected, stop the work and shut down the machine. The machine movement must match with the operating pattern indicated on the card.
If the machine movement does not match the card displayed in the cab, change the card so as to match the machine control pattern.

CHECK WARNING DEVICES

Make sure that the travel alarm (if equipped), and all other warning devices are warning properly.

AVOID INTERFERENCE BETWEEN THE ATTACHMENT AND THE MACHINE

Check clearance between the attachment and the cab before starting operation because a certain kinds of attachment and a certain combination of the option and the machine may cause the contact of the attachment and the cab or some other parts of the machine.

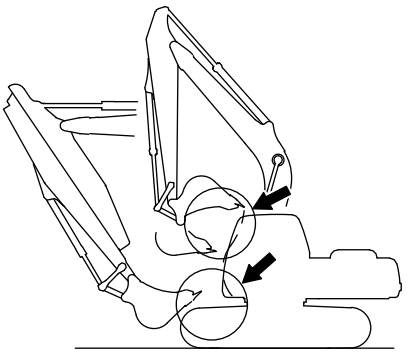

Copyright©2022 Kobelco Construction Machinery Co.,Ltd. All rights reserved. [S2LC00054ZE11] [0609CsCshWbYs]

PRECAUTIONS OF SWINGING / TRAVELING

- Always sound the horn before starting the engine, traveling the machine, or swinging the upper structure to alert people in the vicinity of the machine.
- Always operate at a safe distance from other machines or obstacles in the vicinity of the machine.
- Place a signal person at poor visibility area.

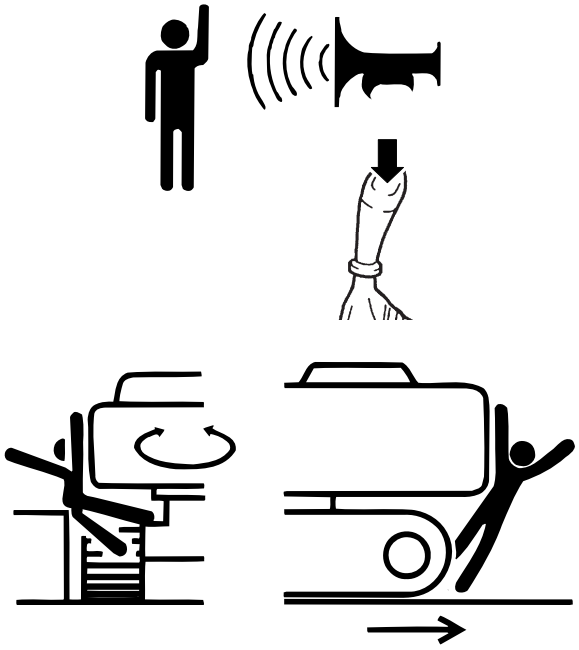

Copyright©2022 Kobelco Construction Machinery Co.,Ltd. All rights reserved. [S2LC00054ZE11] [0609CsCshWbYs]

1.4.2 TRAVELING

ALWAYS CONFIRM DIRECTION OF TRAVEL

Before moving the machine, check the position of the undercarriage (tracks). The normal travel position is for the idler wheels(1) to the front under the cab and the drive sprockets(2) to the rear.
When the undercarriage (tracks) is reversed, the directional controls operate in the opposite directions compared to when the idler wheels(1) are in the front.
Move the travel levers slowly and travel at a low speed.

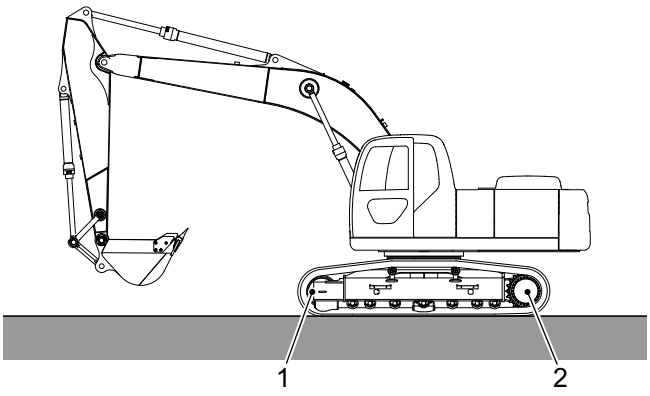

MOVE TRAVEL LEVERS IN A SLOW AND DELIBERATE MANNER

- Gradually increase speed. Moving the travel levers quickly will cause the machine to accelerate quickly and result in a sudden start or sudden acceleration.
- Do not move the travel levers from forward to reverse or vice versa rapidly.
- Do not perform an abrupt pivot turn or spin turn.
- Do not stop quickly by releasing your grip on the levers during travel.

PRECAUTIONS IN TRAVELING

Travel on a level and firm ground as much as possible.

- Keep the bucket at the position possible to lower the bucket to the ground immediately when stopping the machine in an emergency.
- Travel slowly on a rough terrain.
- Do not go over obstacles. When going over obstacles inevitably, go slowly with the attachment positioned close to the ground as much as possible. Because the machine may tip/roll over.

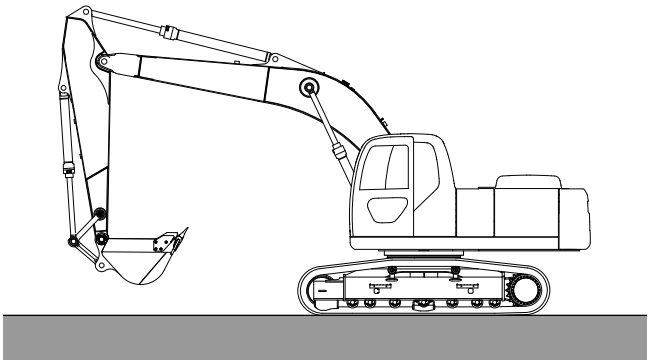

Copyright©2022 Kobelco Construction Machinery Co.,Ltd. All rights reserved. [S2LC00054ZE11] [0609CsCshWbYs]

TRAVELING ON SLOPES

Traveling up and down the slopes of 30 degrees or more is not allowed to avoid a risk of tipping/rolling over.

- When traveling on slopes, keep the bucket at the position possible to lower the bucket to the ground immediately when stopping the machine in an emergency. When traveling down the slopes, go extremely slowly.
- Travel slowly on grasses, leaves and wet steel/wood plates as the surfaces such are slippery.

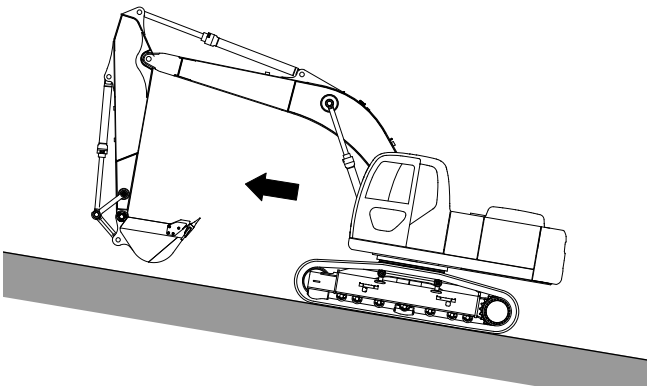

Traveling up slope

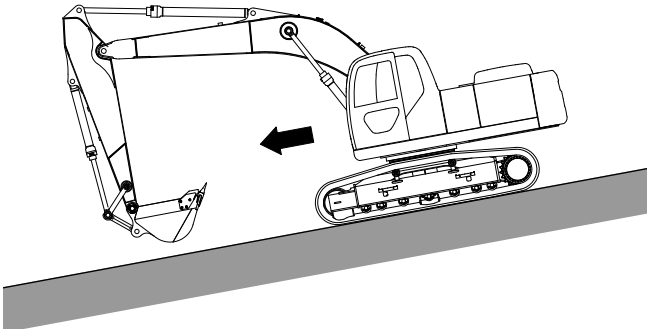

Traveling down slope

- When traveling up steep slopes, extend the front attachment to balance the machine and travel slowly.

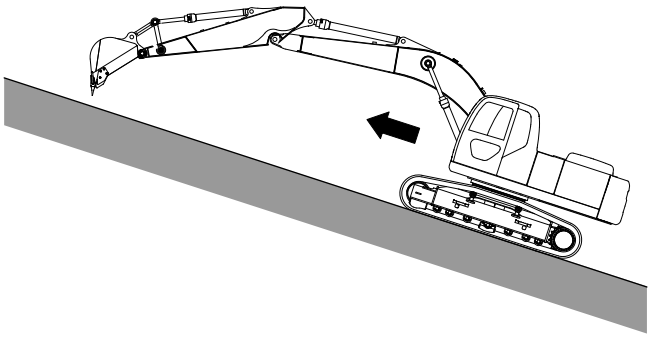

Traveling up steep slope

Copyright©2022 Kobelco Construction Machinery Co.,Ltd. All rights reserved. [S2LC00054ZE11] [0609CsCshWbYs]

PRECAUTION OF TRAVELING ON SLOPES

When traveling on the slopes, be careful of tipping/rolling over and skidding. Keep the bucket at the position possible to lower the bucket to the ground immediately when stopping the machine in an emergency. Do not turn the machine direction on or go across the slopes. Go down to a level ground and take a detour-route for safety.

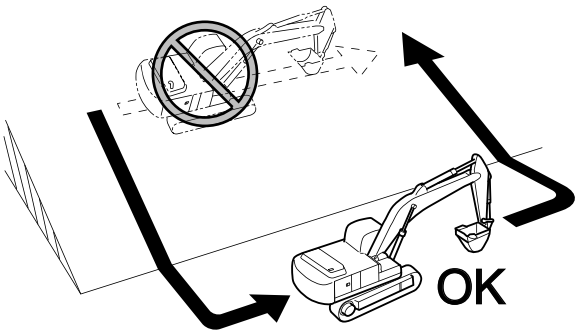

TRAVELING ON FROZEN OR SNOW COVERED GROUND

Use extreme care when operating on frozen or snow covered ground.

- The ground may be extremely slippery and the machine can slide or skid.
- Do not perform abrupt start, stop, or movements or the machine could become unstable and tip or roll over.
- Snow can make elevation changes (e.g., road shoulders or steep banks) hard to perceive.
- Snow can cover obstacles or obstructions and make them difficult to recognize.
- During the day as ambient temperatures rise, frozen ground may thaw and become soft and cause the machine to become unstable or stuck.

TRAVEL ON WET OR LOW TRACTION SURFACES

Use caution when travelling on an incline over wet surfaces, including wood, steel, and piles of wet leaves and branches. The machine could slide or skid and result in serious injury, death or property damage.

Copyright©2022 Kobelco Construction Machinery Co.,Ltd. All rights reserved. [S2LC00054ZE11] [0609CsCshWbYs]

1.4.3 PRECAUTIONS OF WORK

NEVER USE THE SWING POWER TO PERFORM WORK

Never apply swinging force (slewing force) to rock sliding work and side wall breaking work.
If the swing power is used to perform work, excessive force may be exerted on the machine and the attachment resulting in damage to the machine and the attachment and may reduce the life of the swing system.

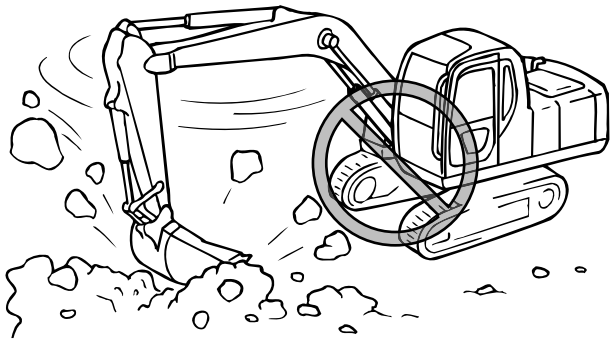

NEVER USE THE TRAVEL POWER TO PERFORM WORK

Do not use the travel power to perform digging or leveling work with the attachment in contact with the ground.
If the travel power is used to perform work, excessive force may be exerted on the machine and the attachment resulting in damage to the machine and the attachment.

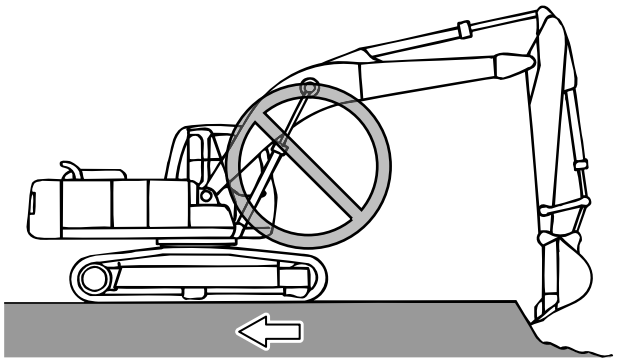

DO NOT PERFORM "HAMMERING" OPERATIONS WITH THE BUCKET

Never use the bucket for hammering and piling. It will cause severe damage to the machine and its components.

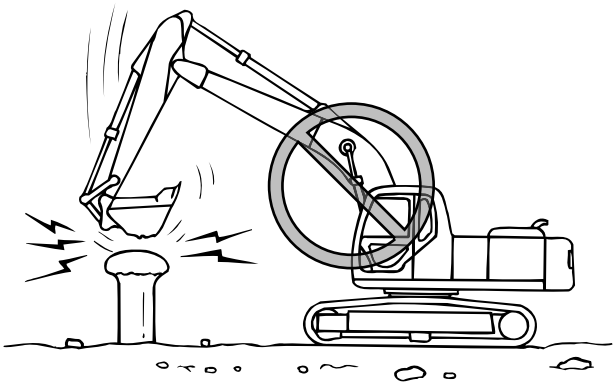

DO NOT USE MACHINE WEIGHT FOR DIGGING OPERATION

Do not tip or raise the machine to obtain power to dig. This could cause severe damage to the machine and its components.
Before digging the hard bedrock, crack the hard bedrock into pieces by another method and hen dig it. It will not damage the machine and result in more economical way.

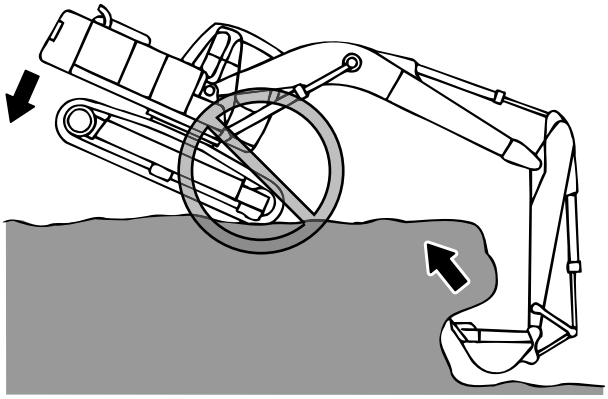

Copyright©2022 Kobelco Construction Machinery Co.,Ltd. All rights reserved. [S2LC00054ZE11] [0609CsCshWbYs]

OPERATING ON A SLOPE

- There is a risk of the machine losing the balance to tip/roll over when operating on a slope. Pay attention to the operation.
- When the machine is on a slope, do not swing the machine to the downhill side.
- If swinging is unavoidable, make an embankment for the machine to be as level as possible to swing on a slope.

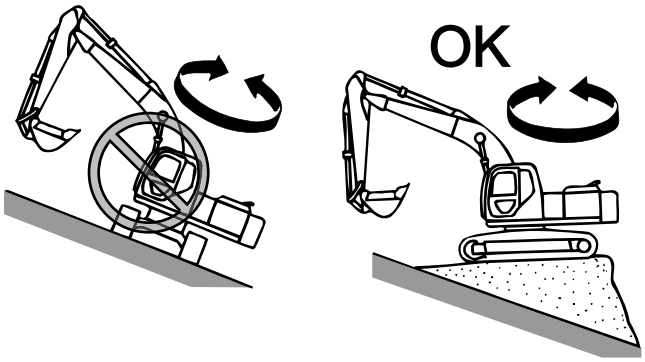

CALL BEFORE YOU DIG

Confirm the local government or the public service company for locations of underground utilities of gas, water, phone, electrical power, and so forth before working in the area seemingly with these lines.
Always inspect the worksite for evidence of unmarked utilities and piping and contact others if necessary.

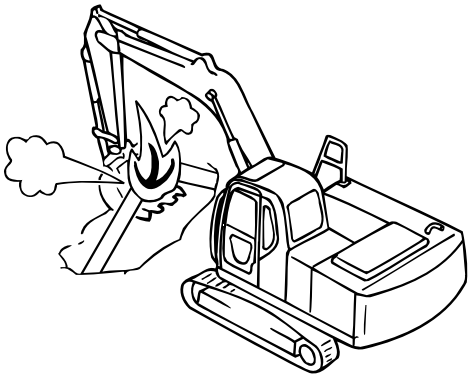

LIMITED MOVEMENT IN WORK AREA

Use extreme caution when working in areas that constrain or limit the movements of the machine, including tunnels, bridges, around electrical power lines, or inside structures, to prevent the machine or the attachment from contacting these obstacles during operation.
To prevent serious injury, death or property damage, always use a signal person to assist the operator with maneuvering in these areas and keep the machine and the attachment a safe distance from these obstacles.
The operator should always be alert and follow the signals from the signal person. The operator shall respond to signals only from the appointed signal person, but shall obey a stop signal from anyone at any time.

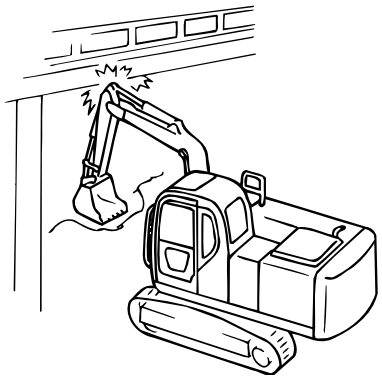

Copyright©2022 Kobelco Construction Machinery Co.,Ltd. All rights reserved. [S2LC00054ZE11] [0609CsCshWbYs]

OPERATING UNDER CLIFF OR OVERHANG

Never undercut or dig beneath a cliff or overhang. A landslide could occur or rocks and debris could fall on the machine. Be aware that the cab and the guards installed provide limited protection for the operator and may not prevent serious injury or death.
The FOPS (Falling-object protective structure) should not allow loads up to 227 kg (500 lbs.) dropped from a height of 5.22 m (17 ft.) to penetrate the cab. During demolition or other activities, the load, the distance of the drop, or both could produce forces that exceed the limits of the FOPS and cause serious injury or death.

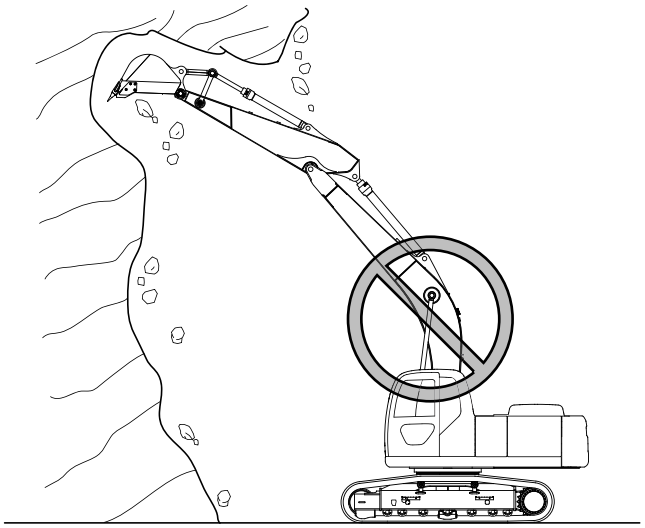

DEEP EXCAVATION OPERATION

To prevent damage to the machine, during deep excavation or diagonal digging.

- Do not allow the arm or the hydraulic piping to contact the side of the trench or hole.
- Do not allow the arm to contact the crawler shoe when operating with the arm below horizontal.

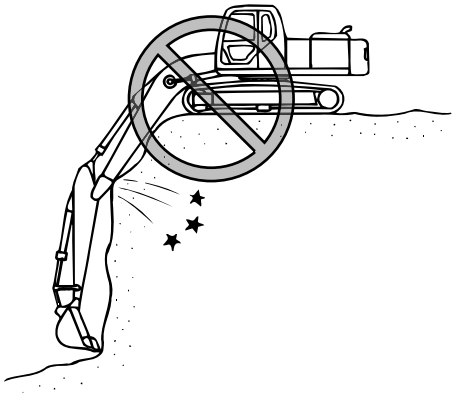

NO PERSONNEL ALLOWED UNDER THE BUCKET OR ATTACHMENT

Never move a suspended load or the bucket over a person or above the driver's cab of a truck.
The load could fall and cause serious injury or death.



Copyright©2022 Kobelco Construction Machinery Co.,Ltd. All rights reserved. [S2LC00054ZE11] [0609CsCshWbYs]

GROUND CONDITIONS

Always place tracks perpendicular (at a 90 degree angle) to the edge of a cliff or the road shoulder with the travel motors(1) positioned away from the edge to prevent the machine from falling over the edge.
Visually inspect for soft ground near the edge, especially either any raised ground or any wet ground following a rain.
Do not dig close to the machine or undercut the bank in front of the machine to prevent the machine from falling over the edge.

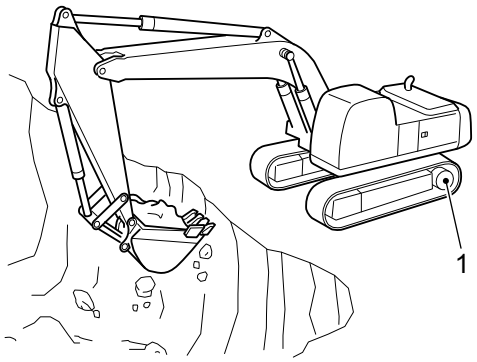

LIFTING WORK

This machine is designed for the application of digging, loading, and leveling using the bucket, or for use with a crusher, breaker/hammer, shear or other attachment.
When lifting a load by using this machine, observe the laws and others of the country or area in which this machine is to be used.
Even though lifting with this machine is allowed according to the laws of the country or area in which this machine is to be used, do not lift the load by using the teeth of the bucket, the breaker, the crusher, or others. It can cause the lifting tools to come off and result in falling off of the load, leading to serious accidents or death. Always use a certified lifting device.

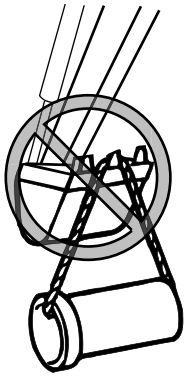

DO NOT OPERATE THE CYLINDERS TO THE STROKE END

Operate the bucket, boom and arm cylinders to leave some clearances to the both stroke ends. If the cylinder is operated to the stroke end, it will generate an excessive load and cause damage to not only the cylinder but also the pin, boom and arm.

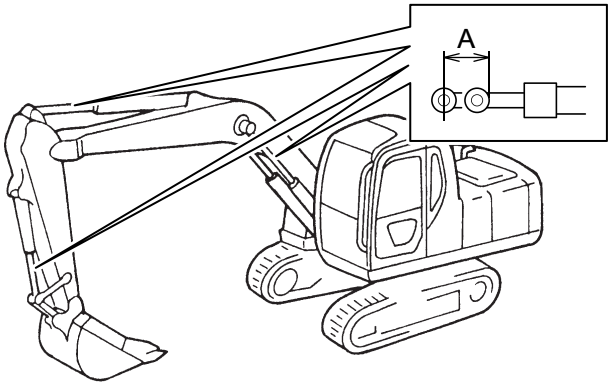

Copyright©2022 Kobelco Construction Machinery Co.,Ltd. All rights reserved. [S2LC00054ZE11] [0609CsCshWbYs]

ELECTRICAL POWER LINES

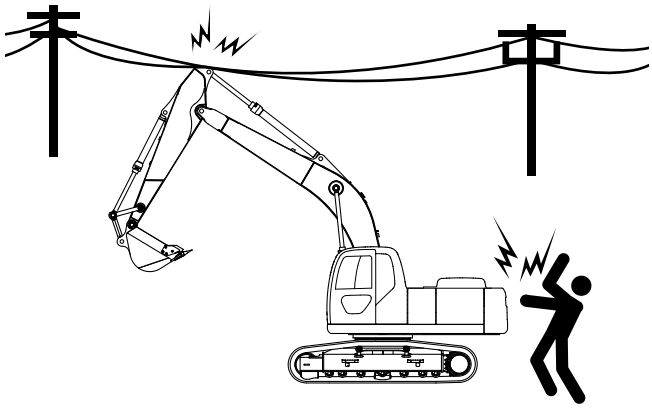

Keep a safe distance from electrical power.
Never approach power lines with any part of the machine and its load unless all local and national required safety precautions have been taken. Electrocution and death can result from arcing, touching or even being close to a machine that is in contact with or near an electrical source.

- Maintain the maximum possible distance from power lines and never violate the minimum clearance.
- Always contact the nearest electric utility and determine jointly what specific precautions must be taken to insure safety.
- Consider all lines to be power lines and treat all power lines as energized even though it is known or believed that the power is shut off and the line is visibly grounded.
- Use a signal person to observe the approach of any part of the machine or load to the power line.
- Caution all ground personnel to stand clear of the machine and the load at all times.
- If the machine should come in contact with a live electrical source, do not leave the operator's seat. Do not allow anyone to approach or touch the machine.

The reference of the safe distances from high voltage cables are as follows.

LINE VOLTAGE(V)	MINIMUM DISTANCE -m(feet)
0 to 50,000	3.0(10) or more
50,000 to 200,000	4.5(15) or more
200,000 to 350,000	6.0(20) or more
350,000 to 500,000	7.5(25) or more
500,000 to 750,000	10.5(35) or more
750,000 to 1,000,000	13.5(45) or more

WORKSITES IN URBAN AREAS

Set up barricades to prevent unauthorized personnel and/or vehicles from entering the worksite. If working near a road, use a signal person and signs to alert vehicles and pedestrians of potential hazards and falling objects. If needed, use a signal person to direct traffic. The operator should always be alert and follow the signals from the signal person. The operator shall respond to signals only from the appointed signal person, but shall obey a stop signal from anyone at any time.

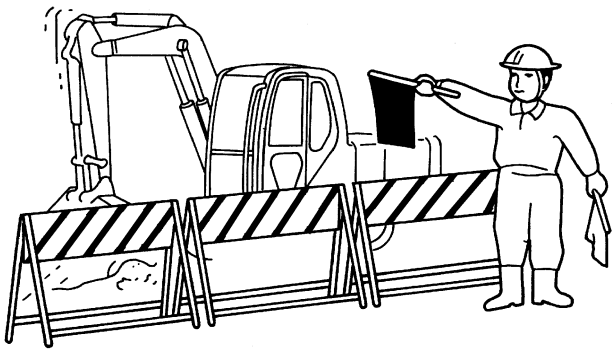

USE WORK LIGHTS

- When operating in dark locations, turn on the work light. If necessary, use additional lighting devices to make the work areas bright enough to operate.
- Stop work if you have poor or limited visibility because of darkness, fog, rain, especially lightning, snow, or other causes.

Copyright©2022 Kobelco Construction Machinery Co.,Ltd. All rights reserved. [S2LC00054ZE11] [0609CsCshWbYs]

TRAVEL ON WET OR LOW TRACTION SURFACES

Use caution when travelling on an incline over wet surfaces, including wood, steel, and piles of wet leaves and branches. The machine could slide or skid and result in serious injury, death or property damage.

OPERATING ON SOFT GROUND

When working on soft or wet ground, place logs or lumber horizontally beneath the crawler tracks to prevent the machine from becoming stuck.
Be aware frozen ground may become soft or wet as the ambient temperature rises during the day and could cause the machine to become unstable or stuck.

VISUALLY INSPECT GROUND CONDITIONS BEFORE OPERATING

The ground near cliffs, trenches and road shoulders may be too soft to operate the machine. Visually inspect for soft ground before travelling or working in these areas. Be aware that rain, blasting activities, earthquakes, or other events may cause the ground to be soft.
To prevent serious injury, death, and property damage, only travel or work on firm ground when the machine is close to sudden elevation changes, including cliffs, trenches and road shoulders. The weight of the machine or vibration from the machine may cause the ground to collapse and cause the machine to tip or roll over.

Copyright©2022 Kobelco Construction Machinery Co.,Ltd. All rights reserved. [S2LC00054ZE11] [0609CsCshWbYs]

1.4.4 SAFETY CHECK ON THE PARKING MACHINE

There are risks of creeping, barbarous act or unexpected movement at the time of coming start if the machine is not parked properly.
Park the machine following the safety parking procedures shown below.

ALWAYS PARK MACHINE PROPERLY

1. Travel machine to a safe location on firm, level ground.
2. Lower the attachment to the ground.
   If equipped with a dozer blade, lower it to the ground.
3. Set the auto acceleration switch to the "OFF" position.
4. Pull the control lock lever to the "LOCKED" (up) position.
   If not locked, incidental contact with the control levers, pedals and other control devices may result in unexpected and unintended machine movement.

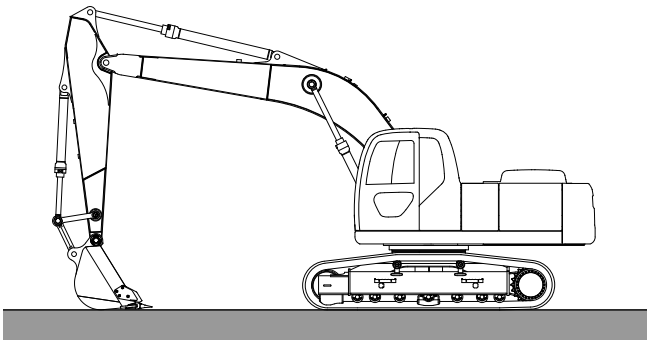

5. Allow engine to idle at low speed for about 5 minutes to cool-down engine.
6. Turn the starter switch to the "OFF" position and remove the key.
   Close and lock the windows and the cab door. Check the windows, doors and all other machine access covers are locked and secure.

PARKING MACHINE ON SLOPE

If the machine must be parked on a slope.

1. The undercarriage and the upper structure and the attachment/equipment must face downhill.
2. Lower the attachment into the ground. If equipped with a bucket, dig the bucket into the ground.
   If equipped with a dozer blade, lower it to the ground.
3. Set the auto acceleration switch to the "OFF" position.
4. Pull the control lock lever to the "LOCKED" (up) position.
   If not locked, incidental contact with the control levers, pedals and other control devices may result in unexpected and unintended machine movement.

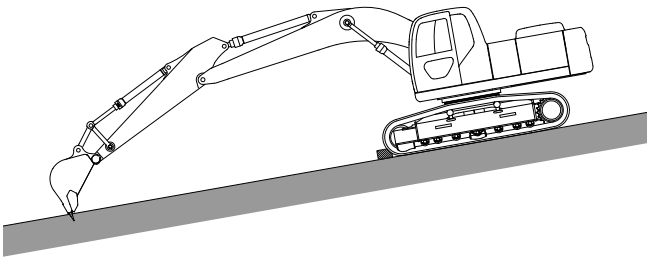

5. Allow engine to idle at low speed for about 5 minutes to cool-down engine.
6. Turn the starter switch to the "OFF" position and remove the key.
   Close and lock the windows and the cab door. Check the windows, doors and all other machine access covers are locked and secure.
7. Block the tracks in the front and the rear.

Copyright©2022 Kobelco Construction Machinery Co.,Ltd. All rights reserved. [S2LC00054ZE11] [0609CsCshWbYs]

1.5 AT THE END OF EACH SHIFT

Always make sure the machine is secure and ready to be used for the next shift or moved to another job site.

1. Park the machine on a firm, level surface.
2. Lower attachment to the ground.
3. Pull the pilot control shut-off lever.
4. Close and secure all windows in place to prevent water or moisture from damaging any electrical components.
5. Remove the key from the key switch and lock all doors and access panels.
6. Refill the fuel tank to the full mark to reduce air volume and condensation (moisture).
   This will decrease the possibility of freezing in the fuel tank, rusting due to moisture and other potential issues.

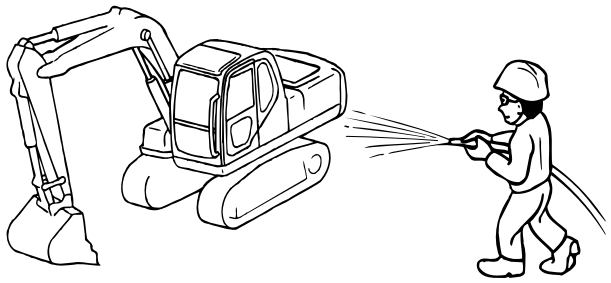

7. Thoroughly clean and inspect the machine. If any issues are found, always lubricate, repair, or replace any machine parts and systems prior to restarting the machine.
8. If the machine is stored in cold climates, it may be necessary to remove the batteries from the machine and store them in a warm, well ventilated area. Re-install the batteries before the next start up. This helps prevent premature battery deterioration.

Copyright©2022 Kobelco Construction Machinery Co.,Ltd. All rights reserved. [S2LC00054ZE11] [0609CsCshWbYs]

1.6 PRECAUTIONS OF INSPECTION & MAINTENANCE

1.6.1 PERIODIC INSPECTIONS

- Every year, the machine should be inspected by a qualified inspector or a registered inspection agency. (specific self-inspection)
- The machine should have an inspection seal to document the month and the year of the last inspection.
- Every month inspect the machine for the following: (periodic self-inspection)

See chapter 4. "INSPECTION AND MAINTENANCE" for additional information about the monthly inspection & maintenance requirements for your machine.
Always keep all maintenance and all inspection records, including both the monthly and the yearly inspections, for the past three (3) years for this machine.

1.6.2 BEFORE INSPECTION & MAINTENANCE

READ OPERATION/MAINTENANCE PROCEDURES CAREFULLY

Improper maintenance could cause serious injury (crush or burn) and damage the machine.
Read and understand the maintenance procedures (preparation for safe work, proper tools, qualifications, important parts, supervisor designation and wear the appropriate personal protective equipment, etc.) described in the manuals before safely and carefully inspecting and performing maintenance on the machine.

CONFIRM JOB PROCEDURES

To prevent accidents, confirm all work procedures before starting.

USE A SIGNAL PERSON AND A FLAGMAN

Know and use the hand signals required for particular jobs and confirm who has the responsibility for signaling: All personnel must know and understand all the signals.
The operator shall respond to signals only from the appointed signal person, but shall obey a stop signal from anyone at any time.
The signal person must stand in a clearly visible location when giving the signals.

ORGANIZE AND CLEAN UP WORK SITE

Inspecting and maintaining the machine at a messy working site may cause personal injury.
Clear obstacles, grease, oil, paint, debris, etc., from the work site.

ATTACH A "DO NOT OPERATE" TAG

To prevent serious injury or death, never allow unauthorized personnel to start the engine or touch the control levers during inspection and maintenance activities. Always lower the attachment, pull the pilot control shut-off lever up, stop the engine, and remove the key before performing maintenance.
Use a temporary "DO NOT OPERATE" hang tag to communicate that the machine is out of service. You may need to use more than one temporary hang tag depending on the work to be performed.
Always have an operator at the controls to shut down the machine if the machine needs to be running for maintenance activity or an inspection. The operator and the maintenance personnel must have a means of communication when performing these tasks.

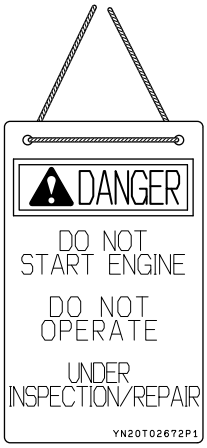

USE PROPER TOOLS

To prevent serious injury or death, do not use of damaged tools or tools not intended for the task.

Copyright©2022 Kobelco Construction Machinery Co.,Ltd. All rights reserved. [S2LC00054ZE11] [0609CsCshWbYs]

1.6.3 DURING INSPECTION & MAINTENANCE

STOP ENGINE BEFORE PERFORMING INSPECTION AND MAINTENANCE

Always stop the engine and allow the engine to cool before performing inspection or maintenance activities. Do not touch engine components when the engine is running or immediately after it has stopped to prevent serious injury or death. There are many hazards that can cause harm, including rotating equipment, high voltage, high pressure fluids, and high temperature.

HOT FLUIDS

To prevent burn injuries.

- Do not remove the radiator cap immediately after stopping operation. Hot radiator fluid may cause burns. Wait until the radiator cap is cool to the touch, then slowly loosen to release the internal pressure. Then remove cap.
- Do not remove the oil cap or plug immediately after stopping operation. Hot oil may cause burns. Wait until the oil cap or plug is cool to the touch, then slowly loosen it to release the internal pressure. Then remove the oil cap or plug.

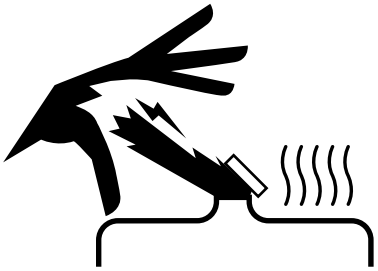

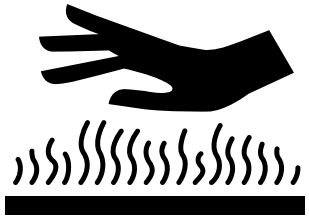

HIGH PRESSURE OIL

Do not attempt to repair or tighten hydraulic hoses or fittings when the engine is running or when the hydraulic circuit is pressurized.
Pressure can be maintained in the hydraulic circuit long after the engine has been shut down.

- Always release the pressure on the hydraulic lines before refilling or draining the oil, or inspecting or maintaining the machine.





High pressure oil can penetrate the skin or eyes and cause injury, blindness or death. Fluid escaping from a small hole can be almost invisible.

- Always wear a face shield, protective glasses and gloves when inspecting for leaks.
- Always use a piece of cardboard or wood to inspect for suspected leaks.
  If fluid is injected into the skin, it must be removed within a few hours by a doctor familiar with this type of injury. High pressure oil from even a pin hole leak can penetrate the skin or eyes and cause severe injury or blindness.

HIGH PRESSURE FUEL IN THE FUEL LINES

The fuel lines operate at high pressure when the engine is running. Before inspecting and maintaining the fuel lines:

- Stop engine and wait at least 30 seconds to allow the fuel line pressure to decrease below its operating pressure.

Copyright©2022 Kobelco Construction Machinery Co.,Ltd. All rights reserved. [S2LC00054ZE11] [0609CsCshWbYs]

HIGH PRESSURE OIL HOSE/PIPING

Leakage of oil or fuel from the hose or piping may cause a fire or malfunction of the machine. Stop working immediately whenever looseness of or leakage from the installation parts of the hoses or piping are found and tighten or repair them using proper repair procedures and tightening torque.
Consult with your KOBELCO authorized dealer if damage or deformation of the hoses or piping is found.
The hoses in below-mentioned conditions are required to be replaced.

- A damaged hose or hose with a deformed fitting.
- The sheathing material of the hose has scratches or cuttings, or exposes the wire reinforcement layer.
- A part of the sheathing material is swelled.
- A part of the hose shows the sign of "torsion" or "crush".

ROTATING PARTS

Stay clear of all rotating and moving parts.

- Wrapping or entanglement may result in serious injury or death.
- Keep hands, clothing and tools away from the rotating fan and running fan belts.
- Always have an operator at the controls to shut down the machine if the machine needs to be running for maintenance activity or an inspection. The operator and the maintenance personnel must have a means of communication when performing these tasks.

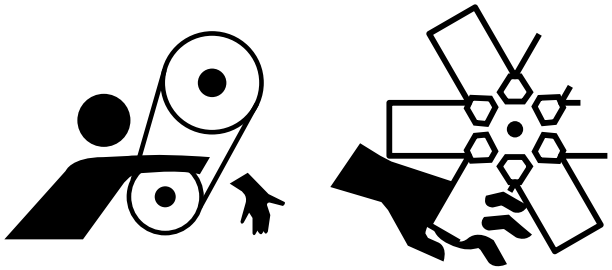

VENTILATION PRECAUTIONS

Never operate the engine in an enclosed area without adequate ventilation. Engine exhaust contains carbon monoxide. Inspecting and maintaining the machine indoors or in a place with poor ventilation could cause serious injury or death.
Adequate ventilation is needed when inspecting, maintaining or running the machine indoors. Fully ventilate the work area, especially when handling fuel, cleaning solvent or paint.
If the natural ventilation is poor, install ventilators, fans, exhaust extension pipes or other artificial venting devices.

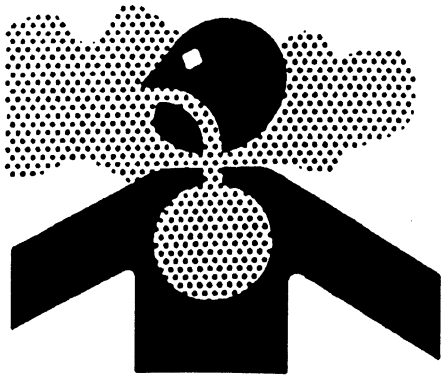

CONNECTING, DISCONNECTING AND STORING THE EQUIPMENT/ATTACHMENTS

To prevent serious injury or death.

- Always follow the instructions from your Supervisor and the instructions in this manual when connecting or disconnecting equipment/attachments.
- Secure attachments to prevent them from falling over when stored.
- Do not allow unauthorized personnel in the storage area.



Copyright©2022 Kobelco Construction Machinery Co.,Ltd. All rights reserved. [S2LC00054ZE11] [0609CsCshWbYs]

SECURELY BLOCK THE MACHINE OR ANY COMPONENT THAT MAY FALL

To prevent serious injury or death, always support all equipment and attachments when performing maintenance or inspecting underneath the machine or any raised equipment.

- Before performing maintenance or repairs under the machine, park the machine on firm level ground, lower the attachment to the ground, pull pilot control shut-off lever and remove the key.
- Securely block the tracks.
- If you must work beneath the raised machine or equipment, always use wood blocks, jack-stands or other rigid and stable supports. Never get under the machine, the arm or the attachment, if they are not sufficiently supported. This procedure is especially important when working on hydraulic cylinders.

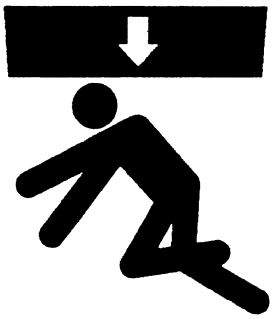

LOCK THE ACCESS PANEL

To prevent serious injury, always secure the door panel in the open position when maintaining the machine. If the door panel is not secure, it could move and you may be injured.

PREVENT FALLS

To prevent serious injury or death

- Clean all grease, oil, mud, and other substances from the steps, handrails, ladders or platforms before use .
- Inspect the steps, handrails, ladders or platforms for damage or loose parts. Replace any damaged parts and tighten any loose bolts or nuts.
- Use the proper personal protective equipment, such as a safety harness, if needed.
- Use extreme caution when walking on elevated surface to avoid slipping.
- Always face the machine and maintain three points of contact with the steps and handrails.

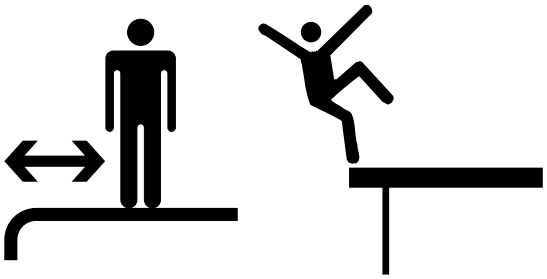

- Use step, handrails, ladders or platforms to access locations above ground level.
- Do not have anything in your hands, including tools, when accessing locations above ground level.
- Never jump on and off the machine.
- Clean all spills, and store or secure tools properly after working.

DO NOT DROP TOOLS OR PARTS

Falling tools or parts may cause damage to the machine or cause unintended movement of the machine and result in serious injury or death.

- Retrieve any tools that fall immediately.
- Always secure tools or parts that are near the machine and store tools properly after maintenance is complete.

GENERAL GUIDELINES FOR WELDING

Contact KOBELCO before welding on the machine. Welding could damage wires, electronic processors, hoses, and tubes. Do not weld tanks or lines that contain flammable fluids or flammable material. Empty and purge the lines and tanks. Then clean the lines and tanks with a nonflammable solvent prior to welding or flame cutting. To prevent serious injury or possible fire, welding work must be performed by a certified welder at a facility with welding devices suitable for the task.

Copyright©2022 Kobelco Construction Machinery Co.,Ltd. All rights reserved. [S2LC00054ZE11] [0609CsCshWbYs]

BASIC PRECAUTIONS FOR WELDING AND GRINDING

- Before welding, select a location away from flammable items and have a fire extinguisher nearby. Ensure adequate ventilation.
- Turn engine off and remove key.
- Disconnect the negative (-) cable from its battery terminal.
- Remove or adequately shield all components, hoses, tubes, and wires in the area.
- Ensure that the components are properly grounded in order to avoid unwanted arcs. Attach the welder ground cable directly to the area within 1 m from the part to be welded and on the same parent material. If the welder ground cable is attached to the area near electric parts/connectors, these electric parts/connectors may be damaged.
- Make sure neither the bearing nor the bearing seal is between the welder ground cable and the part to be welded.
- Do not attach the welder ground cable near the pin or cylinder. It will damage the plating on the pin or cylinder .
- Remove paint from any surface to be welded to avoid generating poisonous gas.
- Always wear protective gears appropriate for welding.
- Perform work in a well-ventilated area.
- After grinding or welding, confirm there is no smoke or fire near the work area .

USE CAUTION WHEN ADJUSTING THE TRACK TENSION

The track adjuster contains high pressure grease. If the tension is adjusted without following the prescribed procedure, the grease fitting may fly off and discharge grease, resulting in serious injury.



- Do not put your face, arms, legs or body in front of the grease fitting. If grease contacts your skin, wash completely with soap and water to avoid skin inflammation.
- Loosen the grease fitting one turn to gradually relieve pressure. If grease does not come out after one turn of the grease fitting, there is a problem. Call your KOBELCO authorized dealer for assistance.
- Loosen the grease fitting slowly.
  After relieving the grease pressure, see "ADJUSTING CRAWLER TENSION" in Chapter 4 for additional information about how to adjust the track tension.

DO NOT DISASSEMBLE THE RECOIL SPRING

Never attempt to disassemble the recoil spring. The recoil spring assembly acts as a shock absorber for the front idler and contains a powerful spring under tension. If it is disassembled, the spring will eject from the assembly and result in severe personal injury or death.
If there is an issue with the recoil spring assembly, contact your KOBELCO authorized dealer for repair.

Copyright©2022 Kobelco Construction Machinery Co.,Ltd. All rights reserved. [S2LC00054ZE11] [0609CsCshWbYs]

BEFORE HAMMERING METAL PINS, EDGES, TEETH OR BEARINGS

Always wear required personal protective equipment such as safety glasses when using hammers, as metal fragments or other objects can fly and cause serious personal injury.
Broken metal pieces may cause severe personal injury when hammering metal pins, teeth or bearings. To avoid injury.

- Wear protective gears such as safety glasses, gloves, hardhat, protective shoes, etc.
- Confirm the work area is clear of personnel before using hammer.
- Use a piece of wood or similar material to absorb the direct impact of the hammer when removing metal pins, edges, teeth or bearings.

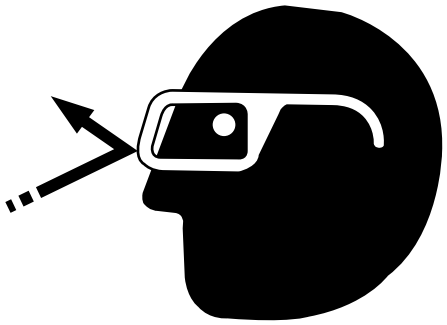

BE AWARE OF THE HAZARDS WITH THE REFRIGERANT AND THE AIR CONDITIONING SYSTEM

- Do not loosen the refrigerant circuit parts. If refrigerant gets in your eyes, it may cause loss of sight including potential blindness.
- Do not touch the refrigerant circuit parts. If refrigerant gets on your skin, it may cause frostbite.
- Do not inhale refrigerant gas; and
- Keep refrigerant gas away from heat sources.

Dispose of refrigerant according to federal, state and local codes and regulations.

Copyright©2022 Kobelco Construction Machinery Co.,Ltd. All rights reserved. [S2LC00054ZE11] [0609CsCshWbYs]

1.6.4 PROHIBITED IN INSPECTION & MAINTENANCE

NEVER USE HEAT NEAR HYDRAULIC EQUIPMENT, PIPING OR HOSES

When welding, soldering or using a torch, do not expose piping and hoses containing oil to heat. Heat may create the potential for exposure to flammable gas and result in a fire.
Always cover hydraulic equipment, piping, hoses and other flammable items with fire-proof blankets.



DO NOT HEAT PIPING WITH FLAMMABLE OIL

- Do not weld or perform gas cutting on pipes and tubes filled with flammable oil.
- Remove flammable oil from pipes and tubes using nonflammable solvent before welding and gas cutting.

DO NOT MODIFY MACHINE WITHOUT APPROVAL FROM KOBELCO

- Any and all modifications to this machine must be approved by KOBELCO.
- Damage to the machine or any failures that may result from unauthorized modification of the machine are not covered by the warranty.

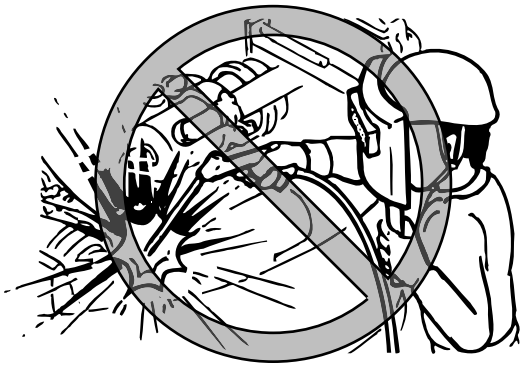

Copyright©2022 Kobelco Construction Machinery Co.,Ltd. All rights reserved. [S2LC00054ZE11] [0609CsCshWbYs]

1.6.5 AFTER INSPECTION & MAINTENANCE

AFTER COMPLETION OF MAINTENANCE

Before returning machine to service, always confirm there are no leaks and the controls are functioning properly.

- Run the engine at low idle speed and check for oil or water leaks.
- Slowly operate each control lever and check that it is functioning properly.
- Then gradually increase the engine speed and check for oil or water leaks again.
- Manipulate each control lever again and check that it is functioning properly.
- Close the doors, guards, engine hood, etc.

PROPER WASTE DISPOSAL

- Drain used fluids from the machine into leak proof containers.
- Never pour used oil or other fluids onto the ground, down a drain or into any body of water. Improper disposal can harm the environment.
  Contact your local government or public service company to ask about proper disposal methods.
- Properly dispose of oil, fuel, engine coolant, refrigerant, solvents, filters, batteries and other harmful substances according to federal, state and local codes and regulations.

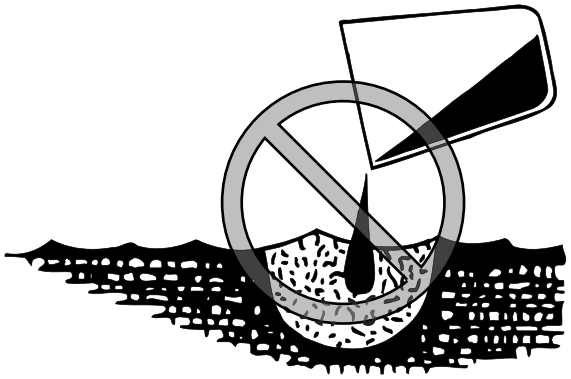

Copyright©2022 Kobelco Construction Machinery Co.,Ltd. All rights reserved. [S2LC00054ZE11] [0609CsCshWbYs]

1.7 PRECAUTIONS FOR BATTERY

1.7.1 HANDLING THE BATTERY

PREVENTION OF ELECTROLYTE BURNS

Wear protective glasses or face shield, and chemical resistant gloves and clothing when handling or servicing batteries.
Battery electrolyte contains dilute sulfuric acid.
Electrolyte will damage eyes or skin on contact. If battery electrolyte contacts skin or eyes, flush affected areas immediately with a large amount of fresh water, then seek medical attention.
Wash hands after touching batteries and connectors.



BATTERY EXPLOSION PREVENTION

- Always keep cigarettes, flames and other ignition sources away from batteries.
  Batteries give off hydrogen gases that can explode and cause serious injury or death.
- Always keep all battery caps tightly secured.



CHARGING THE BATTERY

- Turn the starter switch to the "OFF" position and remove the key.
- Turn the battery shut-off switch "OFF".
- Always disconnect the negative (-) cable first when removing the battery cables.
- Do not connect the positive (+) terminal to the negative (-) terminal using tools or metal objects to check the battery.
- Never allow tools or metal objects to touch both the battery positive (+) terminal and the machine. The resulting spark could cause an explosion.
- Remove the batteries from the machine and remove the battery caps to allow explosive gases to escape in a well-ventilated area.
- Do not charge the frozen battery because it could explode. To prevent the explosion, wait until the battery temperature rises to 16 degrees C (60 degrees F) or higher. NEVER attempt to thaw or to warm the battery with open flames.
- Do not use or charge the battery of which the liquid level is below the lower limit. This might allow gases to build up inside the battery and explode. Check the battery liquid level periodically, and refill the battery with distilled water to the proper liquid level.

Copyright©2022 Kobelco Construction Machinery Co.,Ltd. All rights reserved. [S2LC00054ZE11] [0609CsCshWbYs]

REPLACING THE BATTERY

- Turn the starter switch to the "OFF" position and remove the key.
- Disconnect the negative (-) cable from its battery terminal. When the battery power-off switch is provided, set it to "OFF".
- Always disconnect the negative (-) cable first when removing the battery cables.
- Do not connect the positive (+) terminal to the negative (-) terminal using tools or metal objects to check the battery.
- Never allow tools or metal objects to touch both the battery positive (+) terminal and the machine. The resulting spark could cause an explosion.

BATTERY DISPOSAL

Dispose of batteries according to federal, state and local codes and regulations. If you need additional assistance, contact your KOBELCO authorized dealer about proper disposal of used batteries.

Copyright©2022 Kobelco Construction Machinery Co.,Ltd. All rights reserved. [S2LC00054ZE11] [0609CsCshWbYs]

1.8 HANDLING OF THE ACCUMULATOR OR GAS SPRING

High pressured nitrogen gas is sealed inside the accumulator or gas spring.
To prevent serious injury or death.

- Never attempt to disassemble accumulator or gas spring.
- Never drill or weld, or perform gas cutting on accumulator or gas spring.
- Keep fire and other ignition sources away from the accumulator or gas spring. Never throw accumulator or gas spring into fire.
- Ask your KOBELCO authorized dealer to vent the gas from the accumulator or to remove the gas spring before disposal.
  (Accumulators and gas springs collected by KOBELCO will be transferred to the parts manufacturer for disposal.)

Copyright©2022 Kobelco Construction Machinery Co.,Ltd. All rights reserved. [S2LC00054ZE11] [0609CsCshWbYs]

1.9 TOWING THE MACHINE

To prevent serious injury or death from improper towing methods.

- Always wear leather gloves when handling wire ropes.
- Check the wire rope to be used for towing is strong enough to tow the weight of your machine.
- Never use a wire rope which has cut strands (A), reduced diameter (B), kinks (C) or other visible damage or the wire rope may break while towing.
- Never tow the machine across a slope.
- Never stand between the towing machine and the machine or object that is being towed.
- To prevent damage to the wire ropes, place pads between the wire ropes and edges of the crawler frame.
- Do not shock load the wire ropes. Tow slowly and avoid sudden load changes to the wire ropes.
- Shackles must be used for towing.

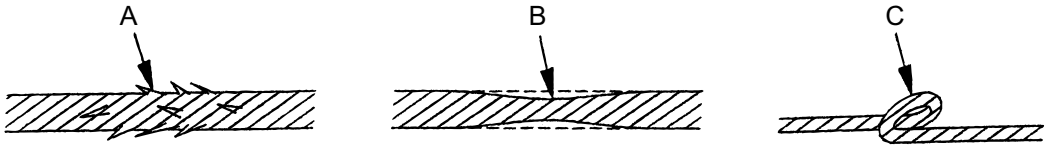

1.9.1 TOWING METHOD OF THE MACHINE

- Only tow the machine if absolutely necessary, e.g. moving the machine to a safe location for repair.
- If the machine cannot travel under its own power, attach wire ropes that are strong enough to tow your machine to the positions on the lower frame as shown. Never use track frame holes for towing. Then tow the machine using another machine.
- Keep the wire ropes level and keep both machines in a straight line when towing as shown in the figure.
- If the travel motor brakes on the machine to be towed are engaged, always chock both crawler tracks to prevent uncontrolled movement of the machine when the travel motor brakes are released.

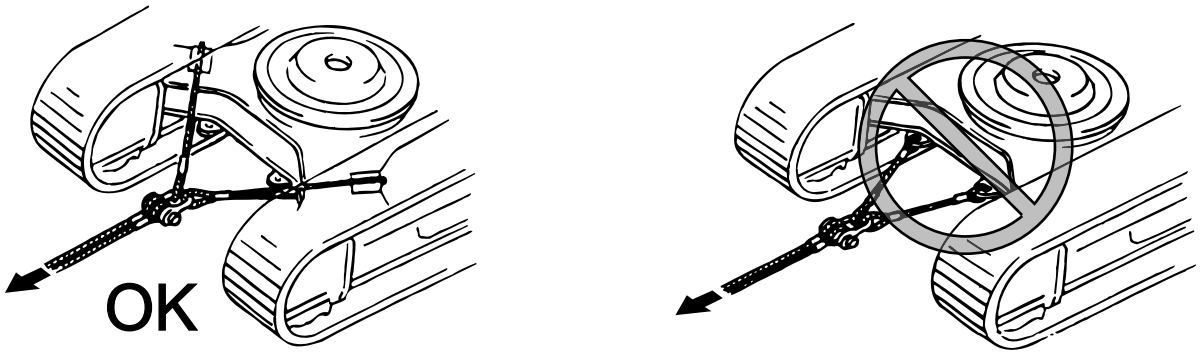

Copyright©2022 Kobelco Construction Machinery Co.,Ltd. All rights reserved. [S2LC00054ZE11] [0609CsCshWbYs]

2. MACHINE FAMILIARIZATION

Copyright©2022 Kobelco Construction Machinery Co.,Ltd. All rights reserved. [S2LC00054ZE11] [0609CsCshWbYs]

Copyright©2022 Kobelco Construction Machinery Co.,Ltd. All rights reserved. [S2LC00054ZE11] [0609CsCshWbYs]

2.1 BASIC COMPONENTS OF THE MACHINE

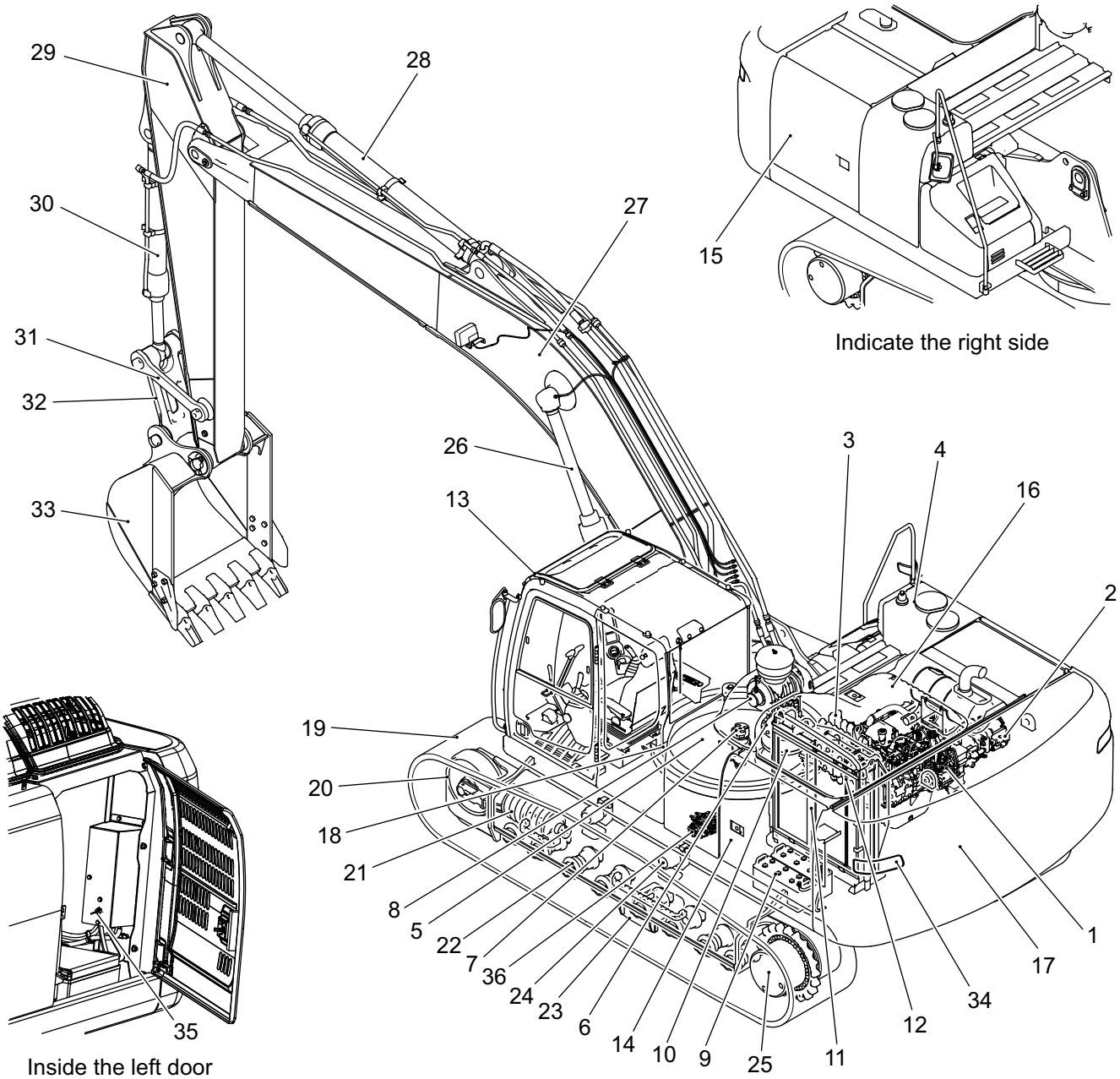

Indicate the right side

Inside the left door

Copyright©2022 Kobelco Construction Machinery Co.,Ltd. All rights reserved. [S2LC00054ZE11] [0609CsCshWbYs]

Item	Name	Item	Name	Item	Name
1	Engine	13	Cab	25	Travel motor
2	Hydraulic pump	14	Left side door	26	Boom cylinder
3	Control valve	15	Right side door	27	Boom
4	Hydraulic oil tank	16	Engine hood	28	Arm cylinder
5	Fuel tank	17	Counterweight	29	Arm
6	Swing motor	18	Swing bearing	30	Bucket cylinder
7	Swivel joint	19	Crawler	31	Idler link
8	Air cleaner	20	Front idler	32	Bucket link
9	Battery	21	Crawler adjuster	33	Bucket
10	Oil cooler	22	Lower Roller	34	Swing flasher
11	Radiator	23	Track guide	35	Battery power-off switch
12	Intercooler	24	Upper roller	36	Rotary multi-control valve

Copyright©2022 Kobelco Construction Machinery Co.,Ltd. All rights reserved. [S2LC00054ZE11] [0609CsCshWbYs]

2.2 OPERATOR'S STATION NOMENCLATURE

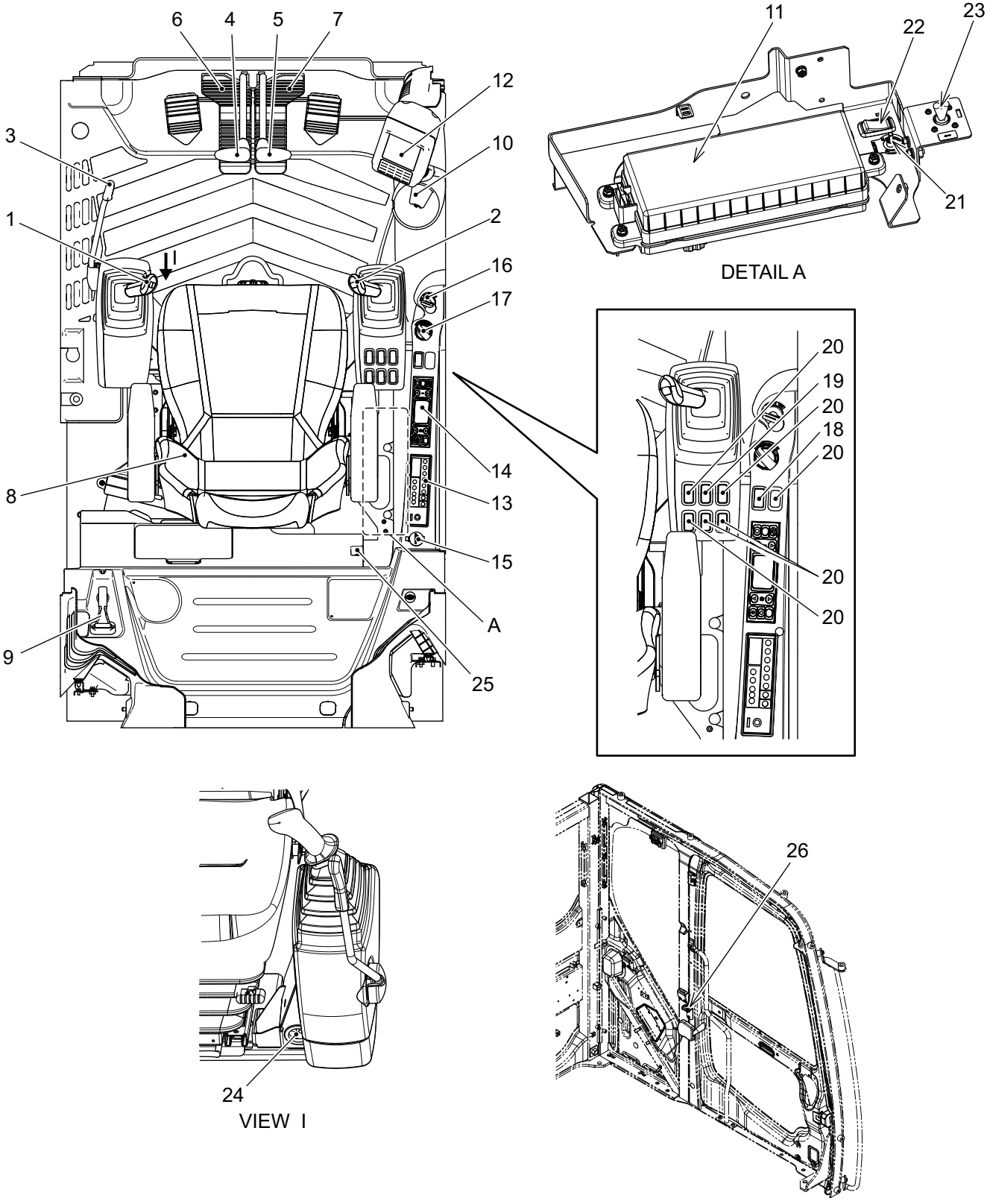

Copyright©2022 Kobelco Construction Machinery Co.,Ltd. All rights reserved. [S2LC00054ZE11] [0609CsCshWbYs]

Item	Name	Item	Name
1	Left control lever (with horn switch)	14	Air conditioner operation panel
2	Right control lever	15	12 V power supply
3	Pilot control shut-off Lever	16	Starter switch
4	Left travel lever	17	Engine throttle
5	Right travel lever	18	Working light (boom and deck)
6	Left travel pedal	19	Heavy lift switch
7	Right travel pedal	20	Cap (Optionally installed switch)
8	Operator's seat	21	Engine throttle for redundant mode
9	Life hammer	22	Swing parking brake release switch
10	Cup holder	23	KPSS release switch
11	Fuse and relay box	24	Engine stop switch
12	Gauge cluster	25	USB port/external input terminal (AUX)
13	Radio	26	Level gauge

Copyright©2022 Kobelco Construction Machinery Co.,Ltd. All rights reserved. [S2LC00054ZE11] [0609CsCshWbYs]

2.3 GAUGE CLUSTER

The gauge cluster consists of A. meter (fuel level and engine coolant temperature), B. switch panel, and C. multi-display.

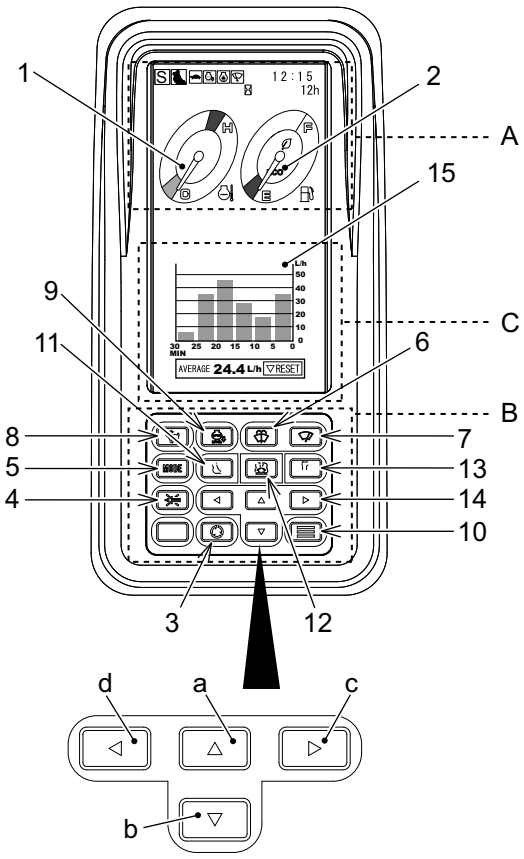

Symbol	Item	Name	Item	Name
A. Meter	1	Engine coolant temperature meter	2	Fuel level meter
B. Switch panel	3	Screen change switch	11	Digging switch
	4	Buzzer stop switch	12	Nibbler switch
	5	Work mode select switch	13	Breaker switch
	6	Washer switch	14	Arrow switch
	7	Wiper switch	a	Up arrow switch
	8	Travel speed select switch	b	Down arrow switch
	9	Auto acceleration switch	c	Right arrow switch
	10	Menu switch	d	Left arrow switch
C Display	15	Multi-display		

CAUTION

- When a warning is displayed on the multi-display, stop your work immediately and inspect and maintain the failure part.

For inspecting or maintaining, see "MAINTENANCE" in Chapter 4.

- The indications on the multi-display do not assure the condition of the machine.
- The visual checking should be carried out for the maintenance and inspection of the machine, without relying on the multi-display only.

Copyright©2022 Kobelco Construction Machinery Co.,Ltd. All rights reserved. [S2LC00054ZE11] [0609CsCshWbYs]

2.3.1 MULTI-DISPLAY

The multi-display can be roughly categorized into the following six functions.

- Main Screen
- Switch Operation Display
- Warning Display
- Nibbler and Breaker Mode Display
- User Menu Display
- Fuel Efficiency Graph Display

After starting the engine, usually main screen is shown as in the figure.

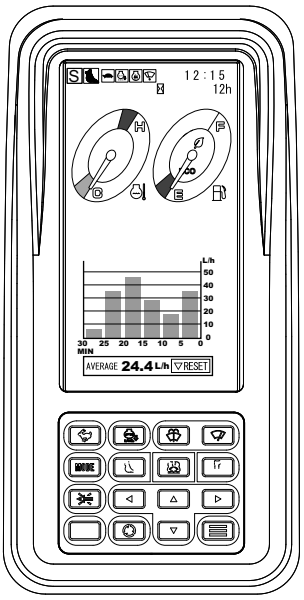

2.3.2 ENGINE COOLANT TEMPERATURE METER

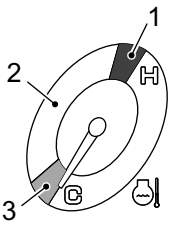

The meter indicates the temperature of the engine coolant. After turning the starter switch "ON", the engine coolant temperature meter is displayed on the multi-display. Water temperature is indicated with a pointer, and the water temperature is normal if it is within the white range. When the water temperature is low, it points the blue range. When it points the red range during operation, it shows overheat state. At that time,set the engine throttle to the low idle position, pull up the control lock lever to the locked(up) position, and do not perform any lever operations until the pointer is in the white range.

(1) Red: Overheat

(2) White: Normal

(3) Blue: Low

2.3.3 FUEL LEVEL METER

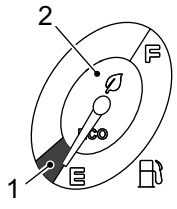

The meter shows the amount of fuel in the fuel tank. After turning the starter switch "ON", the fuel level meter is displayed on the multi-display. The amount of fuel is indicated with a pointer, and when the fuel level is low, the pointer points E. When the fuel level is low, see "CHECKING FUEL LEVEL AND MAKING UP" in Chapter 3, and supply fuel.
During the low fuel consumption operation, "ECO green mark" turns on.

(1) Red: Refuel is required

(2) Green: ECO green mark

2.3.4 HOUR METER

This indicates the total time the engine has run. As long as the engine is running the hour meter continues to count, even if the machine is not traveling. When the engine is running, the meter counts up 1 every hour, regardless of the engine speed. Use the count as the reference for inspection and maintenance intervals.

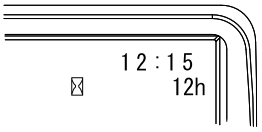

Copyright©2022 Kobelco Construction Machinery Co.,Ltd. All rights reserved. [S2LC00054ZE11] [0609CsCshWbYs]

2.3.5 SCREEN CHANGE SWITCH

After the starter switch is turned "ON" or the engine is started, the display always shows the picture of the rearward visibility monitoring camera.
Each time "screen change switch" (3) is pressed, the item cycles through "the picture of the rearview camera" (a), "fuel efficiency graph" (b) and "logo mark" (c) in order.
The fuel consumption from 30 minutes ago to now in a 5 minutes interval is displayed on "fuel efficiency graph" (b).
To reset, press and hold the down arrow switch while "fuel efficiency graph " (b) is being displayed until the screen is reset.

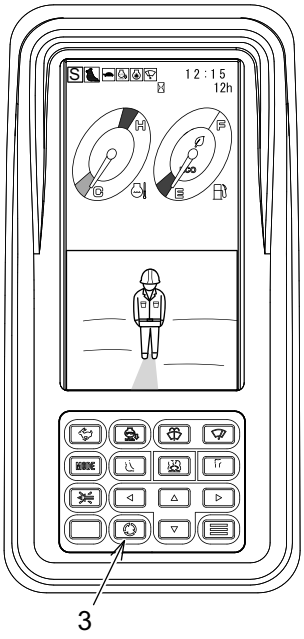

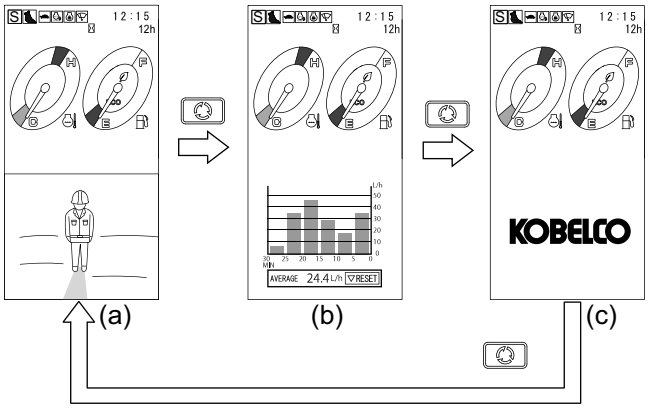

Copyright©2022 Kobelco Construction Machinery Co.,Ltd. All rights reserved. [S2LC00054ZE11] [0609CsCshWbYs]

2.3.6 BUZZER STOP SWITCH

When a warning indication is displayed on the multi-display, press buzzer stop switch (4) to stop the buzzer sound for the items shown in the table.

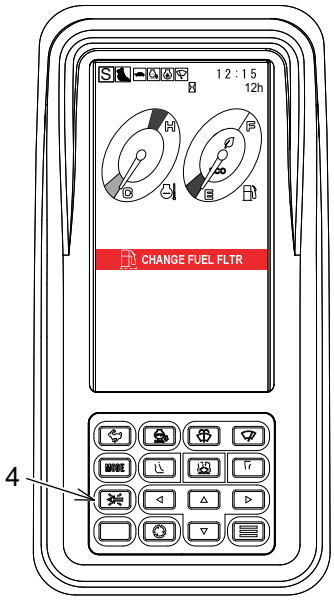

Items in the Warning Display Lists

Warning Level and Its Description

Level	Description
1	This is largely-concerned with the safety and machine movement. Stop the machine immediately and perform inspection and maintenance.
2	This notifies of the mode change of the machine.
3	This may lead to the failure of the machine. Immediately perform inspection and maintenance.
4	Difficulty may occur in working. Immediately perform inspection and maintenance.
5	This notifies of the machine status and maintenance.

Buzzer sound type

Buzzer sound type	Sounds
Type 1	Continuous
Type 2	Sound 0.2 seconds, stop 0.3 seconds
Type 3	Sound 0.5 seconds, stop 0.5 seconds

Priority Group A

Level	Display	Warning Details	Buzzer				
			Auto Stop	Manual Stop	Type	Starter Key ON	Engine Running
1	CPU DATA COMMUNICATION ERROR	Mechatro Controller does not send data.	Unavailable	Available	3	○	○
1	SWING BRAKE DISENGAGED	The swing parking brake release switch is switched to the "RELEASE LOCK" position.	Available (5 sec.)	Available	2	○	○
1	ENGINE STOP	An emergency stop is performed due to low engine oil pressure.	Available (5 sec.)	Unavailable	1	○	—

Copyright©2022 Kobelco Construction Machinery Co.,Ltd. All rights reserved. [S2LC00054ZE11] [0609CsCshWbYs]

Priority Group B

Level	Display	Warning Details	Buzzer				
			Auto Stop	Manual Stop	Type	Starter Key ON	Engine Running
1	NIBBLER AND BREAKER SWITCHING FAILURE PARK AND REPAIR MACHINE	Displayed when the selector valve malfunctions.	Unavailable	Available	2	–	○
2	WARM FINISH WARM-UP	Displayed when automatic warming-up is done.	Available (5 seconds)	Unavailable	2	–	○
3	LOW ENG OIL PRESS.	Displayed when the engine oil pressure reduces, and disconnection is detected.	Unavailable	Available	2	○	○
3	COOLANT OVERHEATING	Displayed when the engine coolant temperature rises.	Unavailable	Available	3	○	○
3	LOW COOLANT LEVEL	Displayed when the radiator upper tank water level becomes low.	Unavailable	Available	3	○	○
3	CLOGGED AIR FLTR	Displayed when the air cleaner element is clogged.	Unavailable	Available	3	○	○
3	I113	Self-diagnosis (failure on the pressure sensor, or the proportional valve,etc.)	Unavailable	Available	3	○	○

2.3.7 WORK MODE SELECT SWITCH

Select the proper work mode from three modes shown below according to the work condition and purpose. The work mode is switched in order of "S" -> "E" -> "H" -> "S" each time Work Mode Select Switch (5) is pressed.
The selected work mode is displayed on the left upper corner of the multi-display for confirmation.
H: H mode (for heavy digging work)
S: S mode (for standard digging work and loading operations)
E: E mode (for lower fuel consumption)

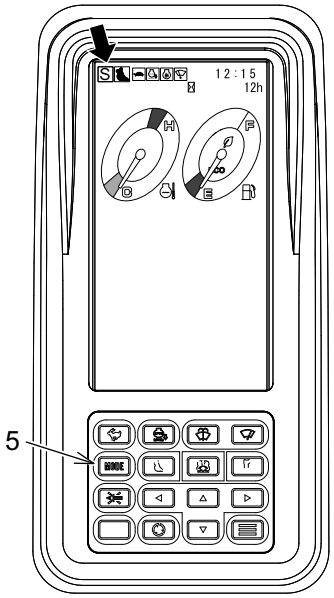

CAUTION

The work mode after the engine start always starts from "S" mode.
Before beginning the work, make sure the selected work mode is correct.

Notice

For details on the selection criteria of each work mode, see "SELECTION OF WORK MODE" in Chapter 3.

Copyright©2022 Kobelco Construction Machinery Co.,Ltd. All rights reserved. [S2LC00054ZE11] [0609CsCshWbYs]

2.3.8 WASHER SWITCH

While washer switch (6) is being pressed, the washer fluid is sprayed through the nozzle of front window.
The washer fluid reservoir is located under the floor plate inside the cab.

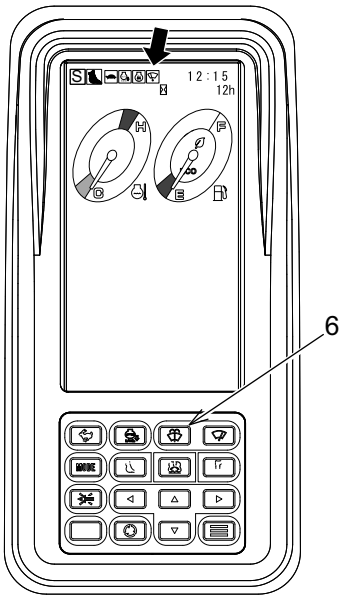

IMPORTANT

Make sure that the washer reservoir is filled with the washer fluid before operating the washer.

2.3.9 WIPER SWITCH

Press the switch (7) to operate the wiper on the front window. When the wiper switch is in operation, "Intermittent" (a) or "Continuous" (b) is displayed on the upper part of the multi-display.
Press once: The wiper moves intermittently.
Press twice: The wiper moves continuously.
Press three times: The wiper stops moving.

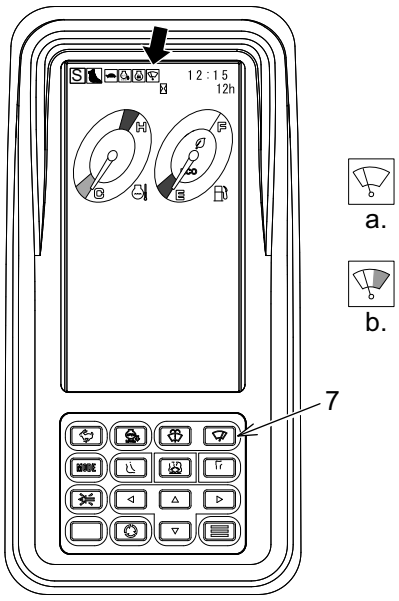

Copyright©2022 Kobelco Construction Machinery Co.,Ltd. All rights reserved. [S2LC00054ZE11] [0609CsCshWbYs]

2.3.10 TRAVEL SPEED SELECT SWITCH

WARNING Loading/unloading the machine

LOW 1st (turtle) speed traveling is necessary to load and unload the machine on to a trailer. During loading or unloading, do not change the travel speed.

The travel speed select switch is located on the gauge cluster switch panel. Each time the engine is started, the travel speed is automatically set to LOW 1st (turtle) speed. Press the switch (8) on the gauge cluster. The speed is changed to the HIGH 2nd speed and a rabbit is indicated on the multi-display.

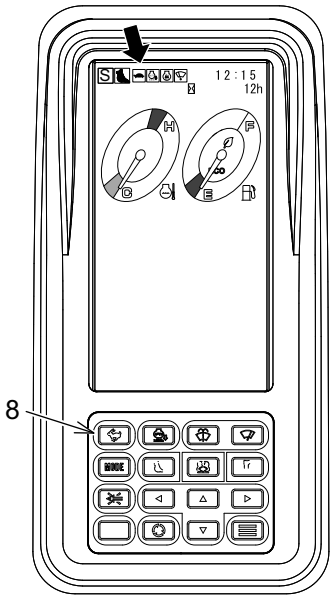

LOW 1st speed: turtle



Set to LOW 1st speed when moving the machine on the rough or soft ground, slope, or in the narrow place, or when powerful tractive force is required.

HIGH 2nd speed: rabbit



Set to HIGH 2nd speed when moving the machine on a level and firm ground.

Copyright©2022 Kobelco Construction Machinery Co.,Ltd. All rights reserved. [S2LC00054ZE11] [0609CsCshWbYs]

2.3.11 AUTO ACCELERATION SWITCH

⚠WARNING Loading/unloading the machine

When loading or unloading the machine on a trailer, turn the auto acceleration switch off.
If it is operated while the acceleration switch is on, the engine speed changes suddenly.

When switch (9) is pressed to turn on, the auto acceleration system activates.
It sets the engine speed to low under the following conditions.

- When the acceleration dial position is set at a higher value than the range of the idle speed.
- When the control levers and/or pedals are not operated for 4 seconds or more.

When the control levers and/or pedals are operated, the engine speed rises back to the set level of the acceleration dial gradually according to the amount of operation of the lever and/or pedals.
If the switch (9) is pressed to turnoff during the auto acceleration operation, the engine speed rises back to the set level of the acceleration dial gradually.

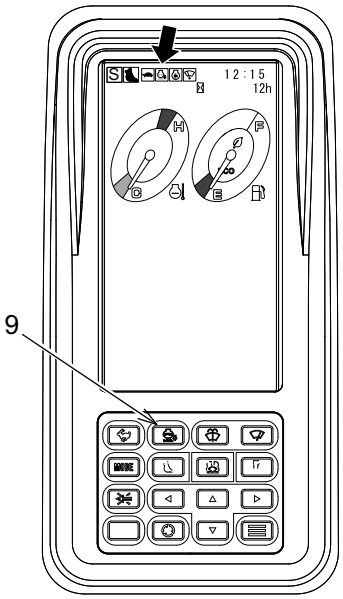

Copyright©2022 Kobelco Construction Machinery Co.,Ltd. All rights reserved. [S2LC00054ZE11] [0609CsCshWbYs]

2.3.12 ATTACHMENT MODE SELECT SWITCH

Use the attachment mode select switch to switch between "Digging", "Nibbler", and "Breaker" modes. Select an appropriate mode corresponding to the attachment from three types: "Digging", "Nibbler", or "Breaker" modes. Before operation, always check that the attachment mode is appropriately set.

(11) Digging Switch

(12) Nibbler Switch

(13) Breaker Switch

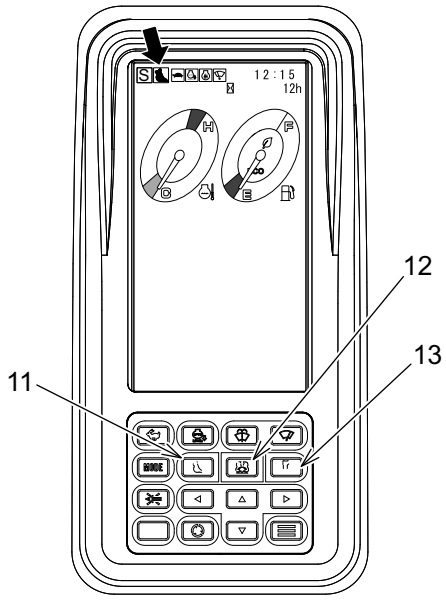

⚠CAUTION

- When working with a hydraulic breaker or a nibbler (crusher) installed, check that an appropriate attachment mode is selected, using the attachment mode select switch as well as the multi-display.
- When the attachment mode is inappropriate, use the attachment mode select switch to switch to an appropriate mode.
- When performing breaker work, always select the breaker mode. Working in a mode other than the breaker mode causes damage in the hydraulic equipment and/or breaker.
- Be sure to place the attachment to the ground and ensure safety before switching the attachment mode. In particular, switching to the breaker mode during nibbler work may cause gripped load to fall off.
- When the attachment mode icon of "digging", "nibbler", or "breaker" flickers, it tells that the attachment mode is not proper.

Copyright©2022 Kobelco Construction Machinery Co.,Ltd. All rights reserved. [S2LC00054ZE11] [0609CsCshWbYs]

2.3.13 MENU SWITCH

Press switch (10) to display the user menu on the multi-display.
From here, the user menu settings are available.

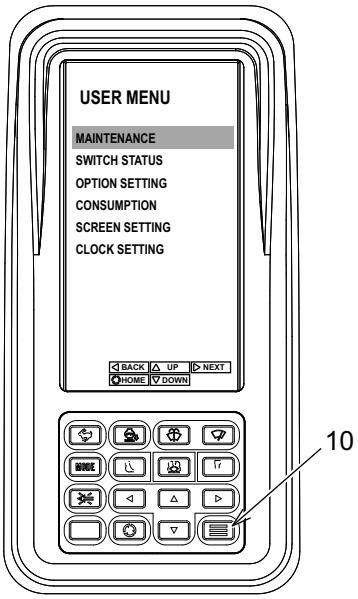

Copyright©2022 Kobelco Construction Machinery Co.,Ltd. All rights reserved. [S2LC00054ZE11] [0609CsCshWbYs]

2.3.14 USER MENU SETTING

The following settings are available in the user menu setting.

- Maintenance schedule setting
- Auto warming up setting
- Clock Setting
- Contrast adjustment
- Brightness (Day) Adjustment
- Brightness (Night) Adjustment
- Pump flow rate adjustment (Nibbler mode/Breaker mode)
- Consumption

Notice

When "Screen Change Switch" (1) is pressed during a adjustment or setting operation, the screen returns to the main screen.

MAINTENANCE SCHEDULE SETTING

Notice

The replacement interval is shown below.

- Engine oil: 250 hours
- Fuel filter: 500 hours
- Hydraulic oil filter: 1,000 hours
- Hydraulic oil: 2,000 hours

(1) Screen Change Switch
(2) Buzzer Stop Switch
(3) Work Mode Select Switch
(4) Washer Switch
(5) Wiper Switch
(6) Travel Speed Select Switch
(7) Auto Acceleration Switch
(8) Menu Switch
(9) Arrow Switch
(10) Attachment Mode Select Switch

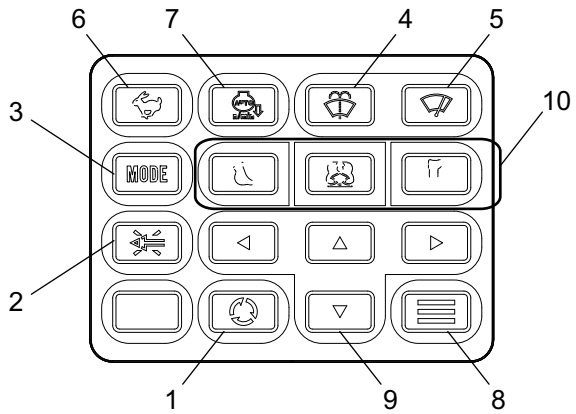

Copyright©2022 Kobelco Construction Machinery Co.,Ltd. All rights reserved. [S2LC00054ZE11] [0609CsCshWbYs]

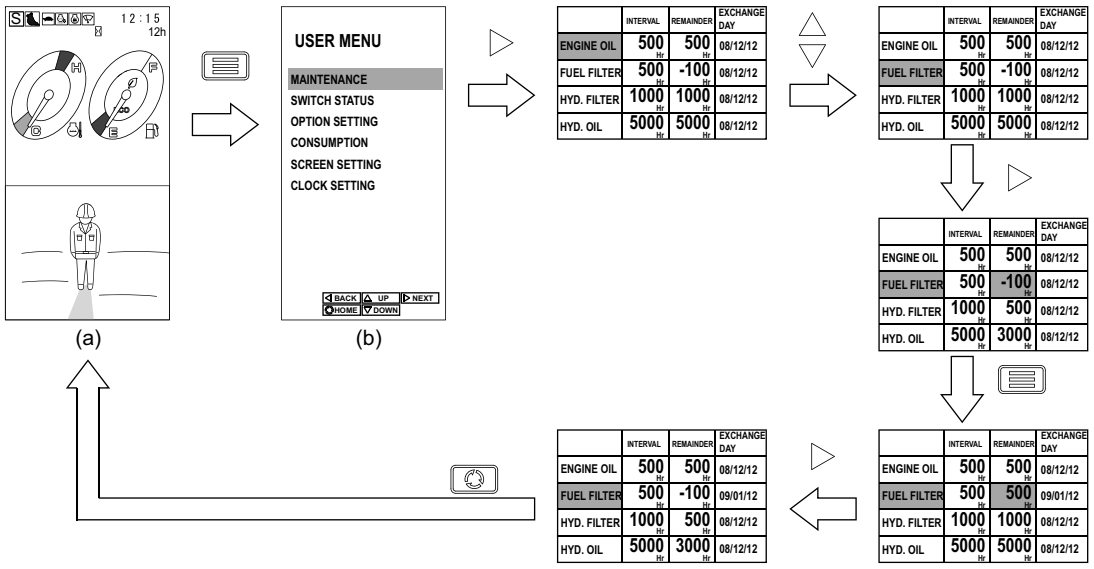

1. Turn the starter switch "ON" to display main screen (a). Press menu switch (8) to enter user menu screen (b).
2. Using the Up and Down arrow switches, move the cursor to "MAINTENANCE". Press the Right arrow switch to enter the maintenance information setting.
3. Using the Up and Down arrow switches, move the cursor to one of the items from "ENGINE OIL", "FUEL FILTER", "HYD.FILTER" or "HYD.OIL".
4. Press the Right arrow switch. The background color of "REMAINDER" turns blue.
5. Press "Menu Switch" (8) to reset the remaining time.
   To set "REMAINDER" to an arbitrary value, press the Up or Down arrow switch to set the desired value between the recommended replacement time and zero.
   At this time, "EXCHANGE DAY" is updated to the current date.
6. Press the Right arrow to store the value.
   At this time, "REMAINDER" turns black.
7. Press "Screen Change Switch" (1) to return to main screen (a).

Copyright©2022 Kobelco Construction Machinery Co.,Ltd. All rights reserved. [S2LC00054ZE11] [0609CsCshWbYs]

AUTO WARMING UP SETTING

CAUTION

- Do not leave the operator's seat during automatic warming-up.
- The attachment/equipment may slowly move to the internal direction but this is not failure.
  Check that the surroundings are clear of people and objects for avoiding being caught between the attachment/equipment and the machine, or interfered with the attachment/equipment.

(1) Screen Change Switch
(2) Buzzer Stop Switch
(3) Work Mode Select Switch
(4) Washer Switch
(5) Wiper Switch
(6) Travel Speed Select Switch
(7) Auto Acceleration Switch
(8) Menu Switch
(9) Arrow Switch
(10) Attachment Mode Select Switch

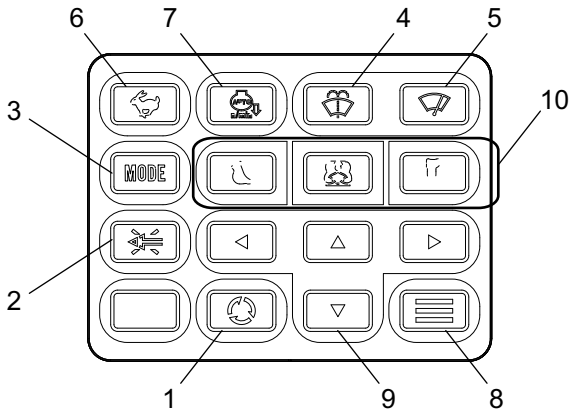

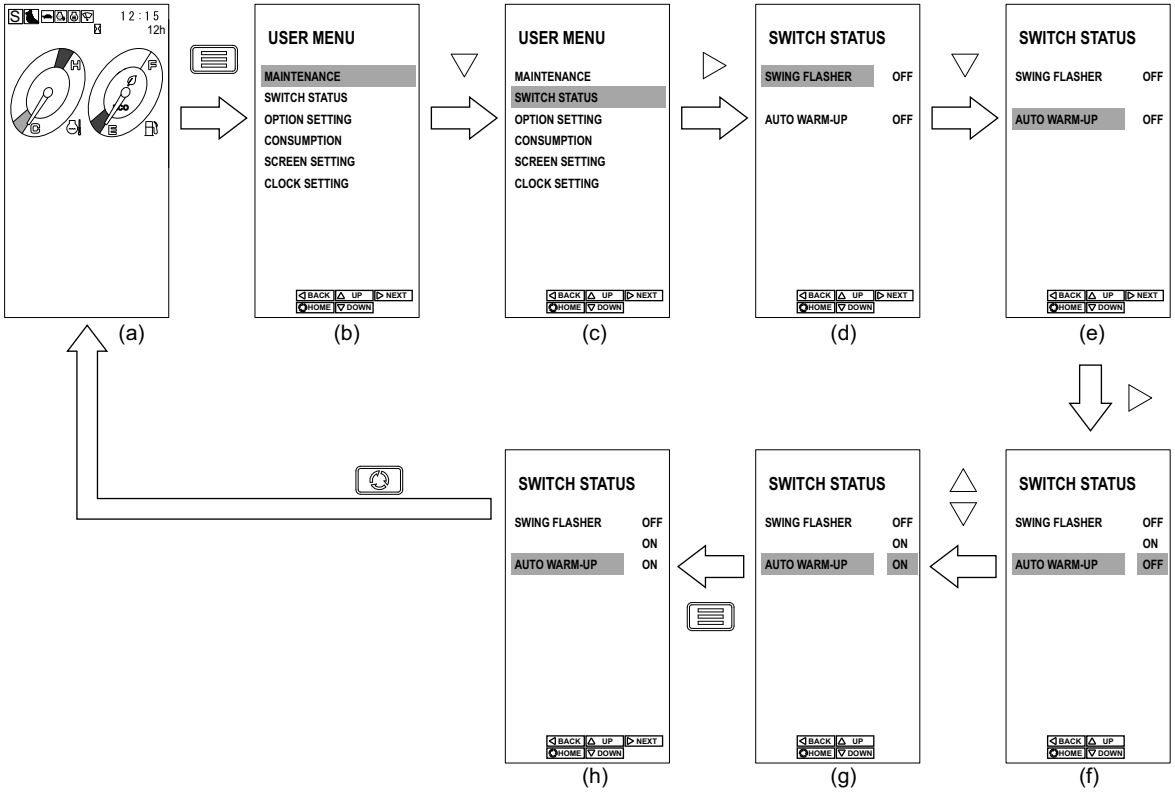

1. Turn the starter switch "ON" to display main screen (a). Press menu switch (8) to enter user menu screen (b).
2. Using the Up or Down arrow switch, move the cursor to "SWITCH STATUS". Press the Right arrow switch to enter the switch setting.
3. Using the Up or Down arrow switch, move the cursor to "AUTO WARM-UP".
4. Press the Right arrow switch to enter display (f). The background color of "OFF" turns blue.
5. Using the Up or Down arrow switch, select "ON".
6. Press "Menu Switch" (8) to set the status.

Copyright©2022 Kobelco Construction Machinery Co.,Ltd. All rights reserved. [S2LC00054ZE11] [0609CsCshWbYs]

At this time, the background color of "ON" turns black.

7. Turn "OFF" the starter key switch once to store the status.

Notice

Once "AUTO WARM-UP" is enabled, there is no need to set it again.

8. Pull up the pilot control shut-off lever to the "LOCKED" position.
9. When the engine is started in cold condition, "AUTO WARM-UP" starts. During warming up of the engine and hydraulic oil, "WARM-UP" is indicated.

IMPORTANT

- If "AUTO WARM-UP" switch is turned "OFF" via the display during hydraulic oil warm-up, the warm-up operation is forced to stop.
- If a lever is operated during hydraulic oil warm-up, the warm-up operation is stopped temporarily. After that, if the lever is continuously at the neutral position for about 10 seconds, the warm-up operation starts again.
- When the engine coolant temperature goes down, the automatic warming-up may start.

10. After the warm-up operation, "WARM-UP FINISHED" is indicated and the buzzer sounds for 5 seconds to tell the completion of the warm-up operation.

Copyright©2022 Kobelco Construction Machinery Co.,Ltd. All rights reserved. [S2LC00054ZE11] [0609CsCshWbYs]

AUTO IDLING STOP SETTING

(1) Screen Change Switch
(2) Buzzer Stop Switch
(3) Work Mode Select Switch
(4) Washer Switch
(5) Wiper Switch
(6) Travel Speed Select Switch
(7) Auto Acceleration Switch
(8) Menu Switch
(9) Arrow Switch
(10) Attachment Mode Select Switch

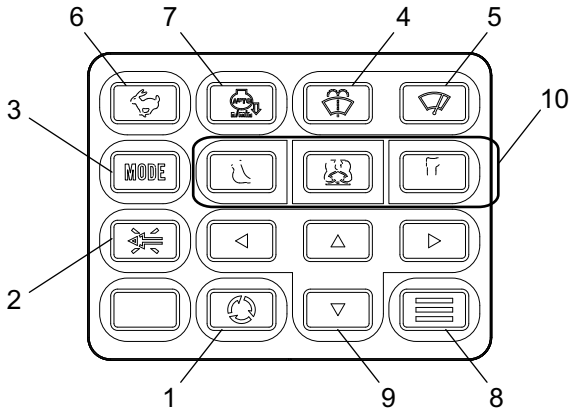

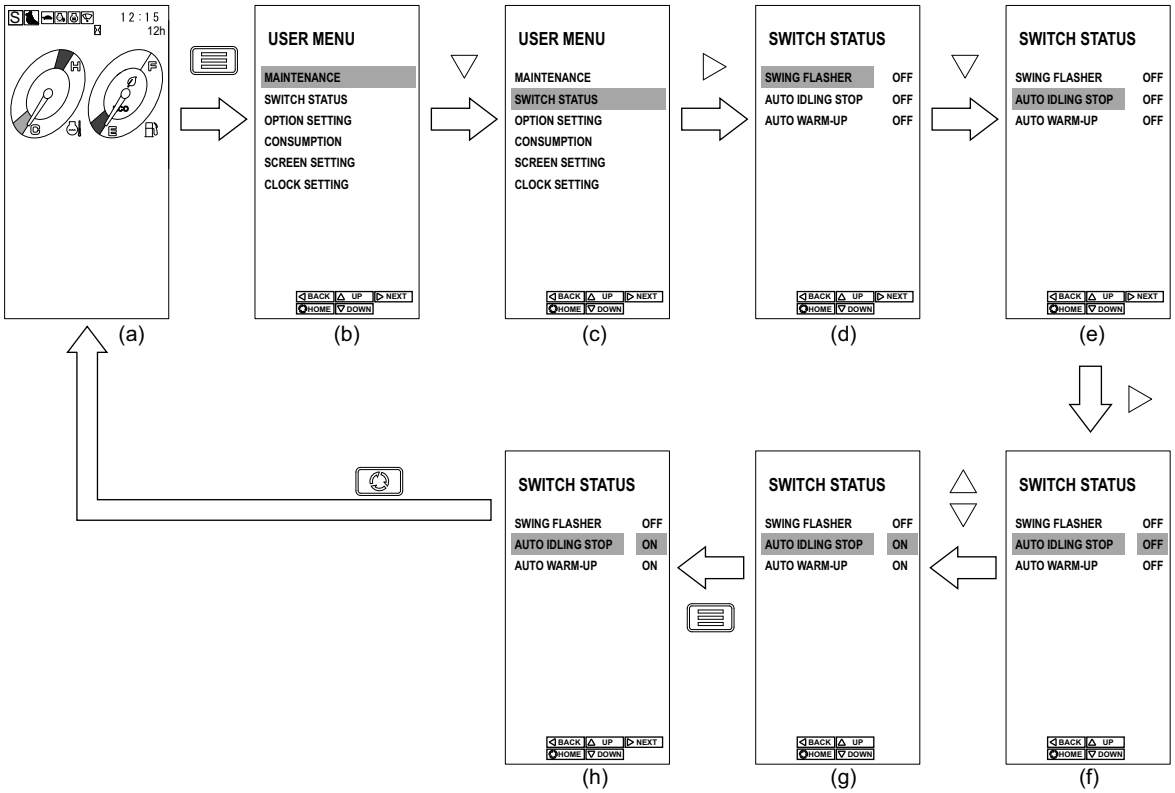

1. Turn the starter switch "ON" to display main screen (a). Press menu switch (8) to enter user menu screen (b).
2. Using the Up or Down arrow switch, move the cursor to "SWITCH STATUS". Press the Right arrow switch to enter the switch setting.
3. Using the Up or Down arrow switch, move the cursor to "AUTO IDLING STOP".
4. Press the Right arrow switch to enter display (f). The background color of "OFF" turns blue.
5. Using the Up or Down arrow switch, select "ON".
6. Press "Menu Switch" (8) to set the status.
   At this time, the background color of "ON" turns black.
7. Turn "OFF" the starter key switch once to store the status.

Copyright©2022 Kobelco Construction Machinery Co.,Ltd. All rights reserved. [S2LC00054ZE11] [0609CsCshWbYs]

CLOCK SETTING

(1) Screen Change Switch
(2) Buzzer Stop Switch
(3) Work Mode Select Switch
(4) Washer Switch
(5) Wiper Switch
(6) Travel Speed Select Switch
(7) Auto Acceleration Switch
(8) Menu Switch
(9) Arrow Switch
(10) Attachment Mode Select Switch

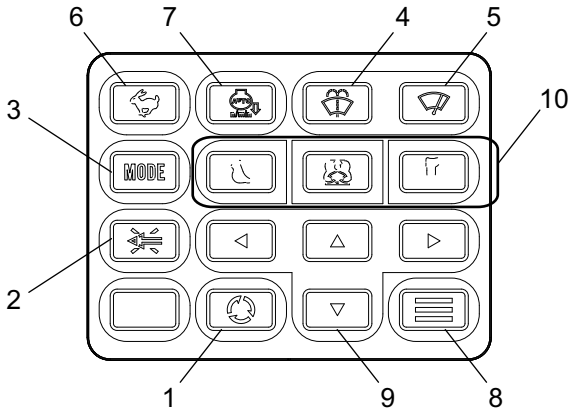

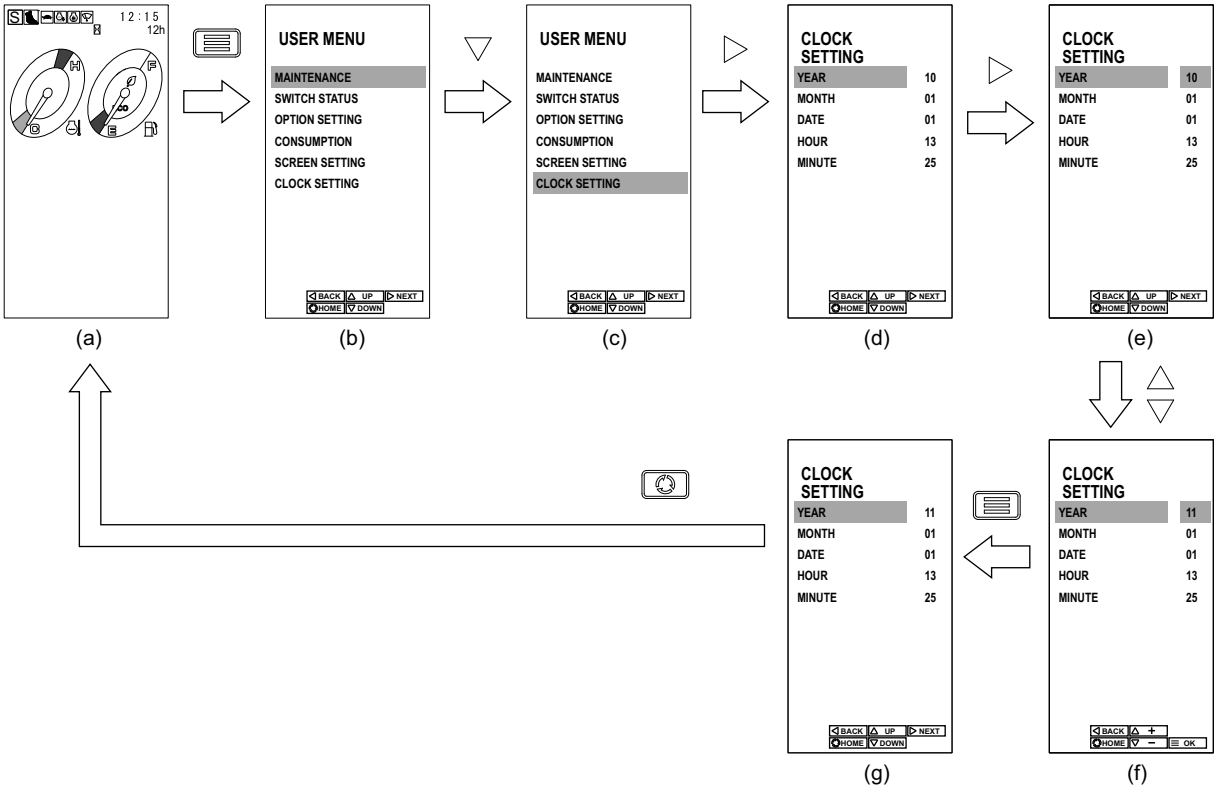

1. Turn the starter switch "ON" to display main screen (a). Press menu switch (8) to enter user menu screen (b).
2. Using the Up or Down arrow switch, move the cursor to "CLOCK SETTING". Press the Right arrow switch to enter the clock setting.
3. Using the Up and Down arrow switches, select any of "YEAR/MONTH/DAY/HOUR/MINUTE" as display (d).
4. Press the Right arrow switch to enter display (e). The background color of the value turns blue.
5. Using the Up and Down arrow switches, select the desired value.
6. Press menu switch (8) to set the desired value.
   At this time, the background color of the value turns black.
7. Press "Screen Change Switch" (1) to return to main screen (a).

Copyright©2022 Kobelco Construction Machinery Co.,Ltd. All rights reserved. [S2LC00054ZE11] [0609CsCshWbYs]

CONTRAST ADJUSTMENT

(1) Screen Change Switch
(2) Buzzer Stop Switch
(3) Work Mode Select Switch
(4) Washer Switch
(5) Wiper Switch
(6) Travel Speed Select Switch
(7) Auto Acceleration Switch
(8) Menu Switch
(9) Arrow Switch
(10) Attachment Mode Select Switch

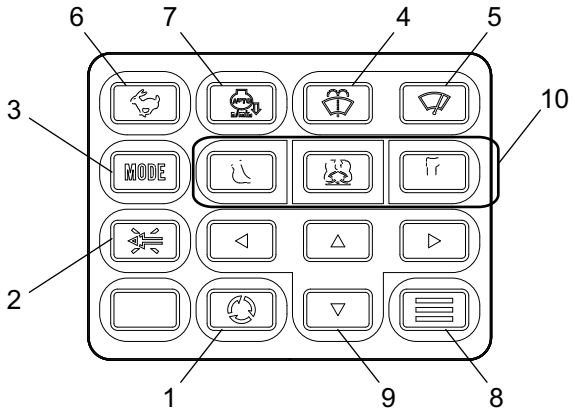

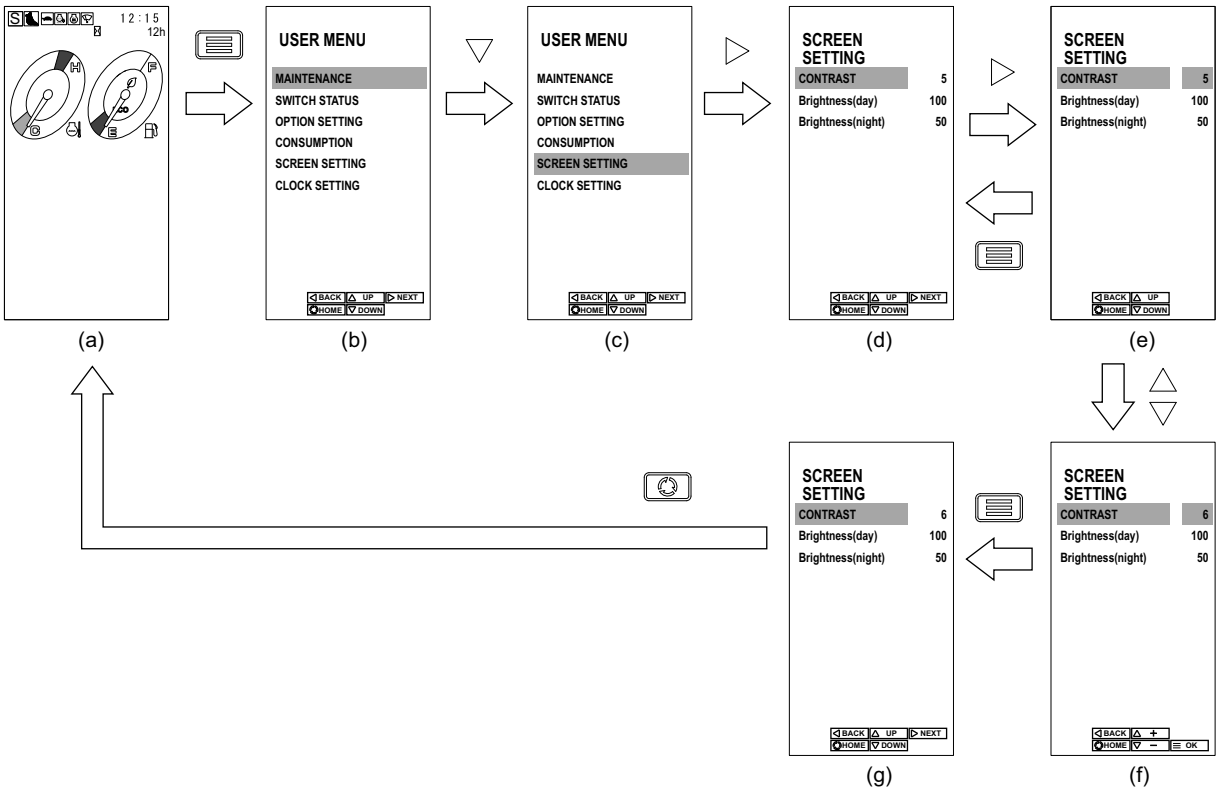

1. Turn the starter switch "ON" to display main screen (a). Press menu switch (8) to enter user menu screen (b).
2. Using the Up or Down arrow switch, move the cursor to "SCREEN SETTING". Press the Right arrow switch to enter the screen setting.
3. Using the Up or Down arrow switch, move the cursor to "CONTRAST".
4. Press the Right arrow switch to enter display (e). The background color of the value turns blue.
5. Using the Up and Down arrow switches, select the desired values.
   The adjustable range is from 1 (Faint) to 10 (Clear).
   * The default value is 5.
6. Press menu switch (8) to set the desired value.
   At this time, the background color of the value turns black.
7. Press "Screen Change Switch" (1) to return to main screen (a).

Copyright©2022 Kobelco Construction Machinery Co.,Ltd. All rights reserved. [S2LC00054ZE11] [0609CsCshWbYs]

BRIGHTNESS (DAY) ADJUSTMENT

(1) Screen Change Switch
(2) Buzzer Stop Switch
(3) Work Mode Select Switch
(4) Washer Switch
(5) Wiper Switch
(6) Travel Speed Select Switch
(7) Auto Acceleration Switch
(8) Menu Switch
(9) Arrow Switch
(10) Attachment Mode Select Switch

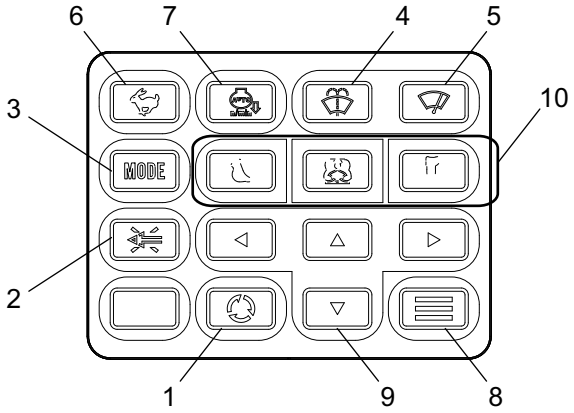

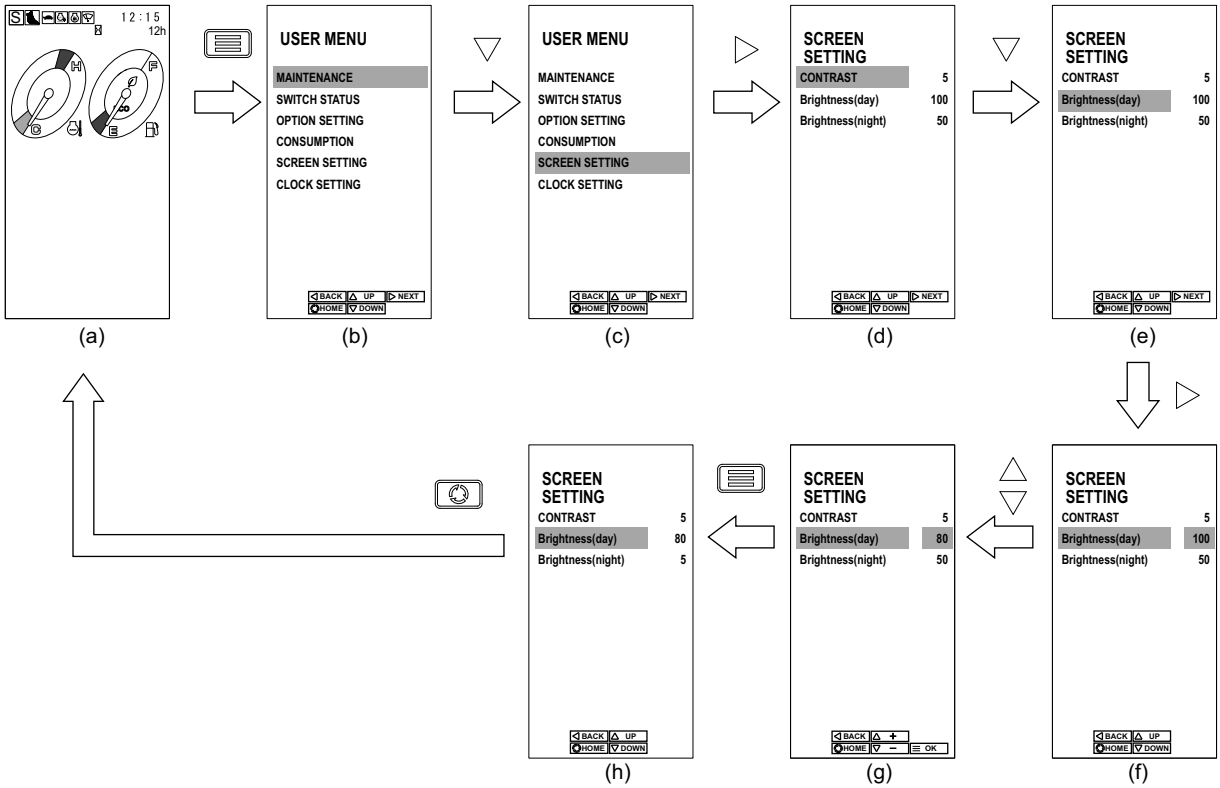

1. Turn the starter switch "ON" to display main screen (a). Press menu switch (8) to enter user menu screen (b).
2. Using the Up or Down arrow switch, move the cursor to "SCREEN SETTING". Press the Right arrow switch to enter the screen setting.
3. Using the up and down arrow switches, move the cursor to "Brightness (day)" as display (e).
4. Press the Right arrow switch to enter display (f). The background color of the value turns blue.
5. Using the Up and Down arrow switches, select the desired values.
   Adjustable Range: 1 (Dark) to 100 (Bright)
   * The default value is 100.
6. Press menu switch (8) to set the desired value.
   At this time, the background color of the value turns black.
7. Press "Screen Change Switch" (1) to return to main screen (a).

Copyright©2022 Kobelco Construction Machinery Co.,Ltd. All rights reserved. [S2LC00054ZE11] [0609CsCshWbYs]

BRIGHTNESS (NIGHT) ADJUSTMENT

(1) Screen Change Switch
(2) Buzzer Stop Switch
(3) Work Mode Select Switch
(4) Washer Switch
(5) Wiper Switch
(6) Travel Speed Select Switch
(7) Auto Acceleration Switch
(8) Menu Switch
(9) Arrow Switch
(10) Attachment Mode Select Switch

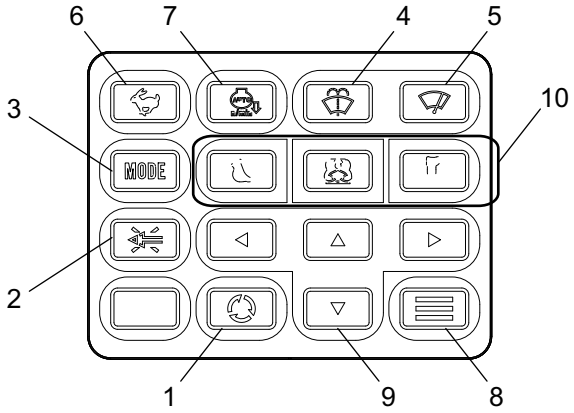

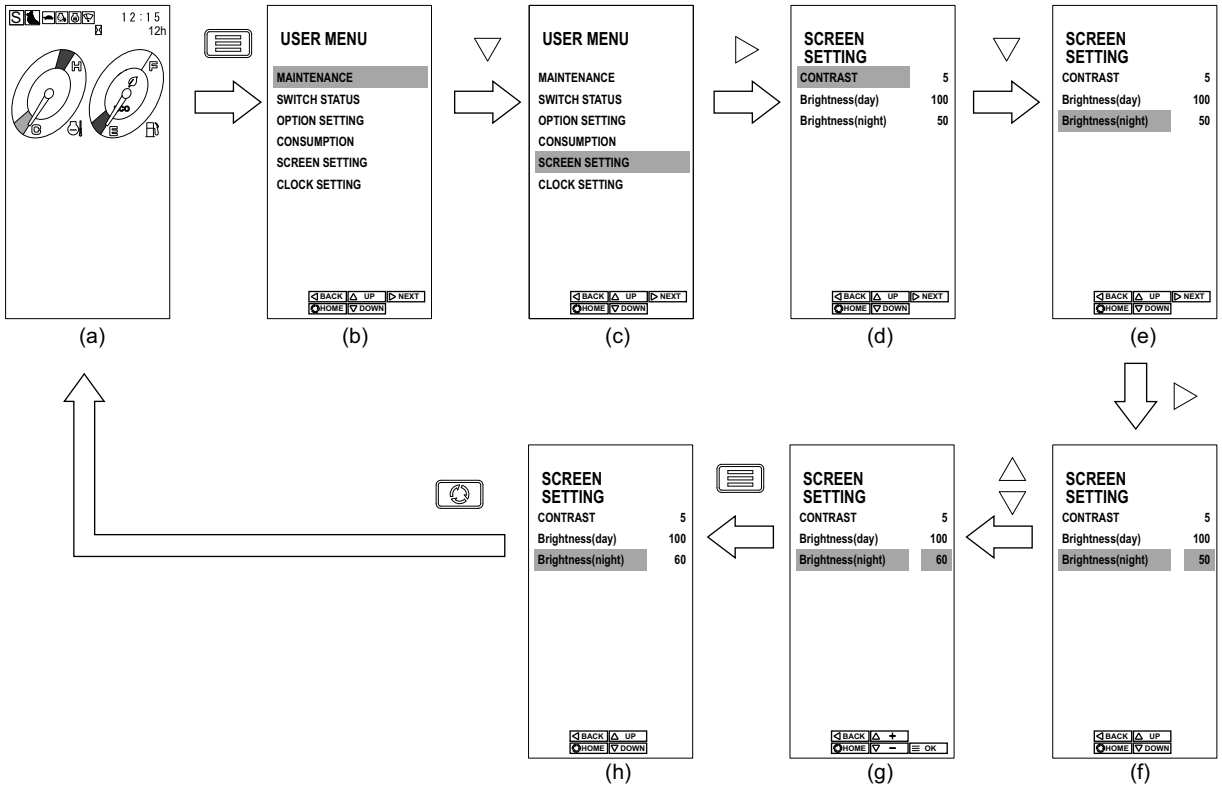

1. Turn the starter switch "ON" to display main screen (a). Press menu switch (8) to enter user menu screen (b).
2. Using the Up or Down arrow switch, move the cursor to "SCREEN SETTING". Press the Right arrow switch to enter the screen setting.
3. Using the up and down arrow switches, move the cursor to "Brightness (night)" as display (e).
4. Press the Right arrow switch to enter display (f). The background color of the value turns blue.
5. Using the Up and Down arrow switches, select the desired values.
   Adjustable Range: 1 (Dark) to 100 (Bright)
   * The default value is 5.
6. Press menu switch (8) to set the desired value.
   At this time, the background color of the value turns black.
7. Press "Screen Change Switch" (1) to return to main screen (a).

Copyright©2022 Kobelco Construction Machinery Co.,Ltd. All rights reserved. [S2LC00054ZE11] [0609CsCshWbYs]

PUMP FLOW RATE ADJUSTMENT (NIBBLER MODE/BREAKER MODE)

IMPORTANT

If there is no switch operation for 20 seconds, the display returns to the main screen.

(1) Screen Change Switch
(2) Buzzer Stop Switch
(3) Work Mode Select Switch
(4) Washer Switch
(5) Wiper Switch
(6) Travel Speed Select Switch
(7) Auto Acceleration Switch
(8) Menu Switch
(9) Arrow Switch
(10) Attachment Mode Select Switch

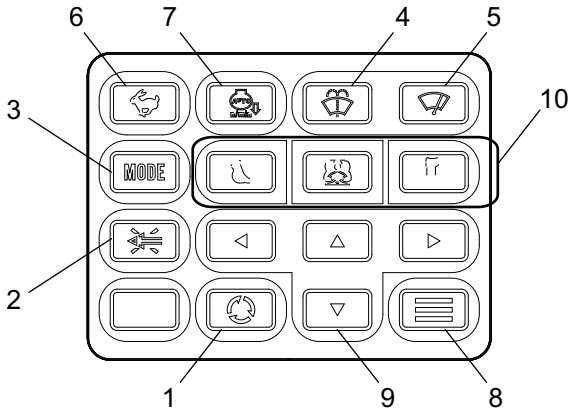

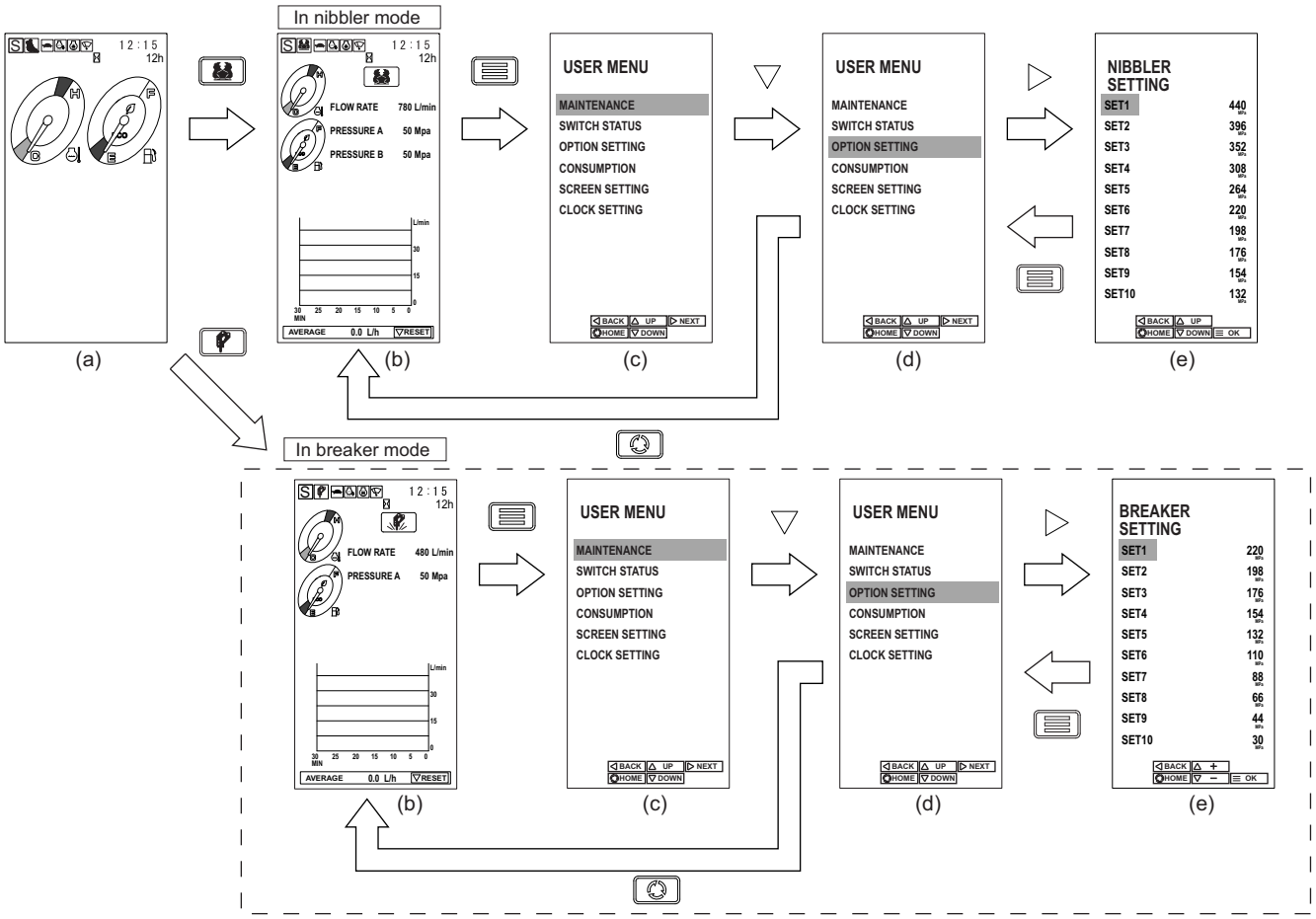

1. Turn the starter switch "ON" to display main screen (a).
2. From main screen (a), press "Nibbler" or "Breaker" switch of "Attachment Mode Select Switch" (10) to change the attachment mode from the digging mode to the nibbler mode or breaker mode. The flow rate indication screen (b) appears.
3. Press menu switch (8) to enter user menu screen (c).
4. Using the Up or Down arrow switch, move the cursor to "OPTION SETTING". Press the Right arrow switch to enter the nibbler or breaker setting.

Copyright©2022 Kobelco Construction Machinery Co.,Ltd. All rights reserved. [S2LC00054ZE11] [0609CsCshWbYs]

5. Using the Up and Down arrow switches, select the desired flow rate.
6. Press menu switch (8) to set the desired value.
7. Press "Screen Change Switch" (1) to return to main screen (a).

CONSUMPTION

Notice

Use the indicated average fuel consumption for reference.

(1) Screen Change Switch
(2) Buzzer Stop Switch
(3) Work Mode Select Switch
(4) Washer Switch
(5) Wiper Switch
(6) Travel Speed Select Switch
(7) Auto Acceleration Switch
(8) Menu Switch
(9) Arrow Switch
(10) Attachment Mode Select Switch

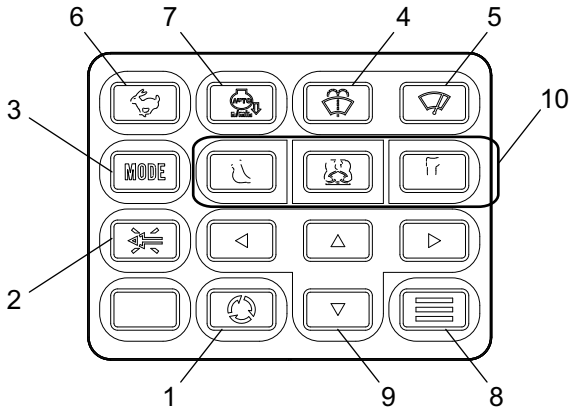

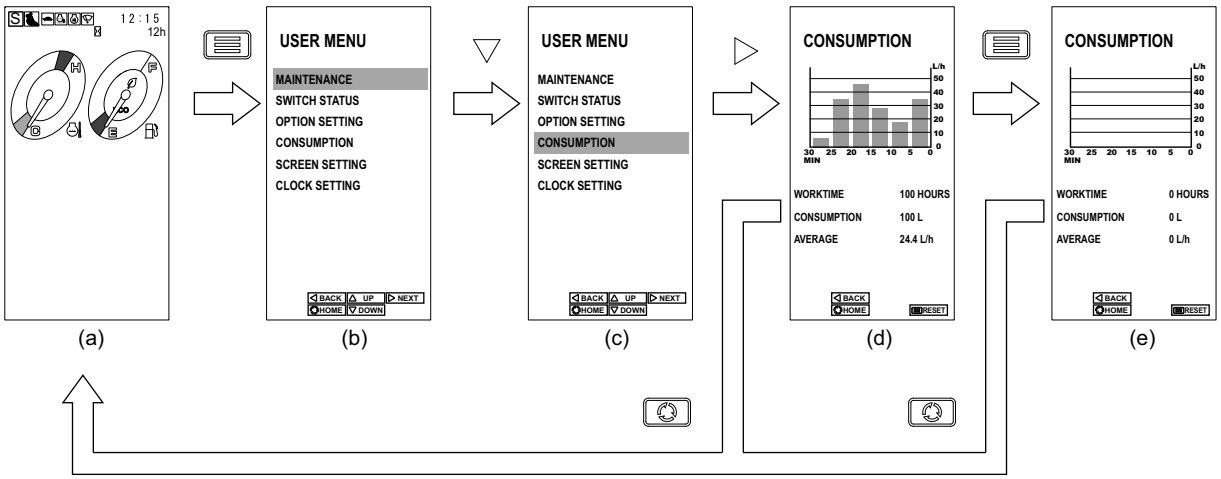

1. Turn the starter switch "ON" to display main screen (a). Press menu switch (8) to enter user menu screen (b).
2. Using the up and down arrow switches, move the cursor to "CONSUMPTION" as display (c). Press the Right arrow switch to enter the fuel efficiency setting.
3. The graph indicates the average fuel consumption by 2 hours for this 12 hours. The values of the operating time, fuel consumption and average fuel consumption are also displayed.
4. To reset these values, press the down arrow switch.
5. Press "Screen Change Switch" (1) to return to main screen (a).

Copyright©2022 Kobelco Construction Machinery Co.,Ltd. All rights reserved. [S2LC00054ZE11] [0609CsCshWbYs]

2.3.15 DISPLAY FOR MAINTENANCE

From the Maintenance Information screen in the user menu, it is possible to display the remaining time to the end of recommended replacement interval specified for the filter/oil. After reaching to the end of replacement interval, inspect and maintain them following to "INSPECTION AND MAINTENANCE" in Chapter 4.
This menu is available for confirmation of the following items.

Replacement Interval

Name	Default
Engine oil	500 hrs.
Fuel filter	500 hrs.
Hydraulic oil filter	1,000 hrs.
Hydraulic oil	5,000 hrs.

- Engine oil
  This shows the remaining time of the recommended replacement time for the engine oil, as well as the date of the last oil change.
- Fuel filter
  This shows the remaining time of the recommended replacement time for the fuel filter, as well as the date of the last fuel filter change.
- Hydraulic oil filter
  This shows the remaining time of the recommended replacement time for the hydraulic oil filter, as well as the date of the last hydraulic oil filter change.

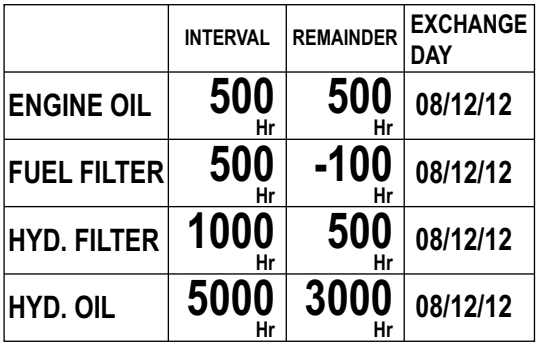

- Hydraulic oil
  This shows the remaining time of the recommended replacement time for the hydraulic oil, as well as the date of the last hydraulic oil change.

Notice

- For the time setting procedure for the next oil or filter change of each type, see "USER MENU SETTING" in Chapter 2.
- When the recommended replacement time is over for any items, the "REMAINDER" indication for that item turns red. When necessary to return to the initial value, reset it.

Notice

- The recommended replacement time of the engine oil is 500 hours. The multi-display warns of it without a buzzer.
- The recommended replacement time of the fuel filter is 500 hours. The multi-display warns of it without a buzzer.
- The recommended replacement time of the hydraulic oil filter is 1,000 hours. The multi-display warns of it without a buzzer.
- The recommended replacement time of the hydraulic oil is 5000 hours. The multi-display warns of it without a buzzer.

Copyright©2022 Kobelco Construction Machinery Co.,Ltd. All rights reserved. [S2LC00054ZE11] [0609CsCshWbYs]

2.3.16 WARNING DISPLAY SCREEN

WARNING WHEN WARNINGS ARE DISPLAYED

A warning displayed on the multi-display may lead to severe trouble. Stop the operation immediately, investigate the causes and take proper measures.

- The warning display has the order of priority and when many troubles such as level 1 and 2 in priority (A) occurred at the same time, level 1 is displayed in priority to level 2.
- The gauge cluster processes signals received from various sensors and switches via Mechatro Controller, outputs the signals to the multi-display and lamp display, and makes the buzzer sound.
- The start-up inspection should be performed according to not only the multi-display but also the instructions in "MAINTENANCE".

WARNING CLASSIFICATION CHART (PRIORITY A)

Display	Level	Warning Details	Required Actions
CPU DATA COMMUNICATION ERROR	1	Mechatro Controller does not send data.	Contact your KOBELCO authorized dealer for inspection/maintenance.
SWING BRAKE DISENGAGED	1	The swing parking brake release switch is switched to the "RELEASE LOCK" position.	
ENGINE STOP	1	An emergency stop is performed due to low engine oil pressure.	

Copyright©2022 Kobelco Construction Machinery Co.,Ltd. All rights reserved. [S2LC00054ZE11] [0609CsCshWbYs]

WARNING CLASSIFICATION CHART (PRIORITY B)

Display	Level	Warning Details	Required Actions
NIBBLER AND BREAKER SWITCHING FAILURE PARK AND REPAIR MACHINE	1	Displayed when the selector valve malfunctions.	The attachment installed to the crusher or breaker specification machine does not match the selected attachment mode. Select an appropriate attachment mode by switching the attachment mode select switch. Breaker mode: When using a breaker Nibbler mode: When using a nibbler (crusher) Even when an adequate operation mode is selected and the indication of selector failure does not disappear, contact and ask your KOBELCO authorized dealer for inspection/maintenance.
POWER BOOST ON	2	Displayed when the power boost switch (Yellow) on the upper grip of the right control lever is “ON”. - Separate boom specification When operating nibbler (crusher) up (bucket out)	Displayed when the power boost switch (Yellow) on the upper grip of the right control lever is used.
WARM FINISH WARM-UP	2	Displayed when the automatic warming-up is done.	The warming-up operation of the engine and hydraulic oil are completed. Refer to “STARTING ENGINE” in “3. MACHINE OPERATION”, and start the engine with proper procedures.
LOW ENG OIL PRESS.	3	- Displayed when the engine oil pressure is lower than a specified value, and the output reduction control is performed. - Displayed when a disconnection is detected.	- Stop the engine promptly, check the oil level, and disconnection place, and refill or replace the specified engine oil referring to “LUBRICANT, FUEL & COOLANT SPECIFICATIONS”, if required. - If this is displayed while engine stop, the wire may be disconnected, etc. Contact your KOBELCO authorized dealer for repair.
COOLANT OVERHEATING	3	Displayed when the coolant temperature exceeds a specified value.	Stop operation, and lower the engine speed to the low idle speed to cool the engine. When the warning display does not disappear after a few minutes, stop the engine, and check the coolant level, fan belt tension, and radiator clogging.
LOW COOLANT LEVEL	3	Displayed when the water level of the radiator upper tank is low.	Stop the engine, and open the radiator cap after the coolant temperature becomes low to refill coolant. Also, check the radiator sub tank, and refill coolant if the coolant level is low.
CLOGGED AIR FLTR	3	Displayed when the engine output reduces due to a clogged intake air filter.	Check and clean the filter. If necessary, replace the filter.
I113	3	Error code is displayed when failure occurred in the pressure sensor, proportional valve, etc.	Ask your KOBELCO authorized dealer for inspection/maintenance.
CHARGE ERROR	4	Battery failure. (High voltage/low voltage/ insufficient charge) The battery is not charged adequately if the warning does not disappear after a while from the engine is started or if the warning is displayed while the engine is running.	Check the usage condition of the electrical components and the charge circuit.
LOW FUEL LEVEL	4	The fuel is below a specified quantity.	Refill the specified fuel.

Copyright©2022 Kobelco Construction Machinery Co.,Ltd. All rights reserved. [S2LC00054ZE11] [0609CsCshWbYs]

Display	Level	Warning Details	Required Actions
	5	Displayed when the temperature of hydraulic oil rises abnormally.	Stop operation, and ask your KOBELCO authorized dealer for inspection/maintenance.
	5	Displayed during the automatic warming-up operation.	Automatic warming-up operation is being performed. Wait until "WARM FINISH WARM-UP" appears.
	5	The remaining time to the engine oil change becomes zero.	Refill the specified new engine oil with the specified quantity.
	5	Displayed when the key switch is turned to “START” position while the pilot control shut-off lever is down.	Set the key switch back to “ON” position, and secure safety by raising the pilot control shut-off lever. Turn the switch to “START” again to start the engine.
	5	Displayed when the remaining time to the fuel filter change becomes zero.	Replace with a specified new fuel filter.
	5	Displayed when the remaining time to the hydraulic oil filter change becomes zero.	Replace with a specified new hydraulic oil filter.
	5	Displayed when the remaining time to the hydraulic oil change becomes zero.	Replace with a specified new hydraulic oil.

Copyright©2022 Kobelco Construction Machinery Co.,Ltd. All rights reserved. [S2LC00054ZE11] [0609CsCshWbYs]

2.4 HANDLING OF SWITCHES AND METERS

2.4.1 STARTER SWITCH

This switch is used to start or stop the engine.

- OFF (STOP):
  At this position, you can insert or remove the starter key. Before restarting or stopping the engine, turn the starter key to the "OFF" position.
- ACC (Accessory):
  While the engine is stopped, power and the radio (FM/AM) can be used in the "ACC" position.
- ON:
  Electricity flows in all circuits. During operation, the starter key should be in this position.
- START:
  When starting the engine, turn the key to the "START" position. When the engine starts, release your hand from the starter switch. The starter key will return to the "ON" position by itself.

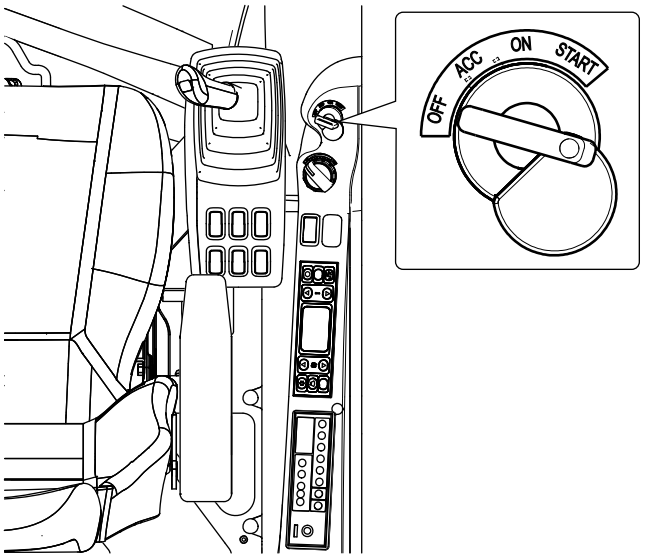

2.4.2 ENGINE THROTTLE

This dial adjusts the number of engine speed (output). This is a dial type rotary switch and a continuous adjustment type. If you release the dial at a rotated position, it stops at that position, and maintains assigned engine speed.

- LO (Low idle)
  The number of engine speed is minimum at the end of left rotation.
- H (High idle)
  The number of engine speed is maximum at the end of right rotation.

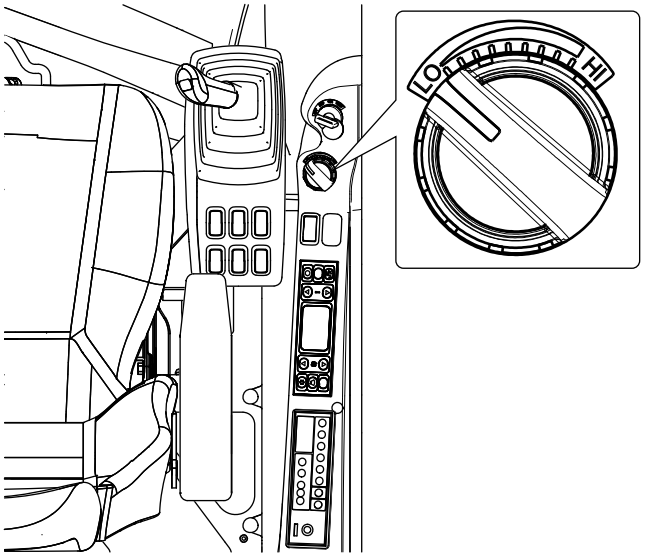

Copyright©2022 Kobelco Construction Machinery Co.,Ltd. All rights reserved. [S2LC00054ZE11] [0609CsCshWbYs]

2.4.3 WORKING LIGHT (BOOM AND DECK)

Push the switch to turn on the working lights on the boom (left) and deck (right).
Push the no symbol mark side to turn off the working lights on the boom (left) and deck (right).

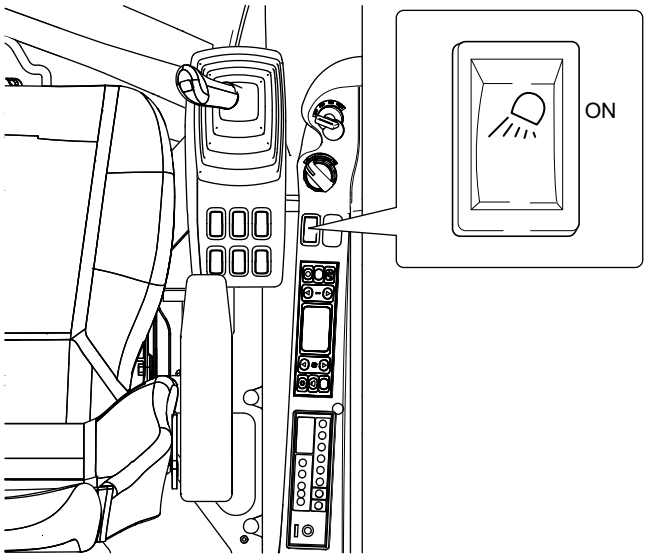

2.4.4 HEAVY LIFT SWITCH

This switch is used when lifting a heavy load and power is required for it.
If the switch is pressed, the heavy lift mode starts.
If the side without the symbol mark is pressed, the heavy lift mode is released.

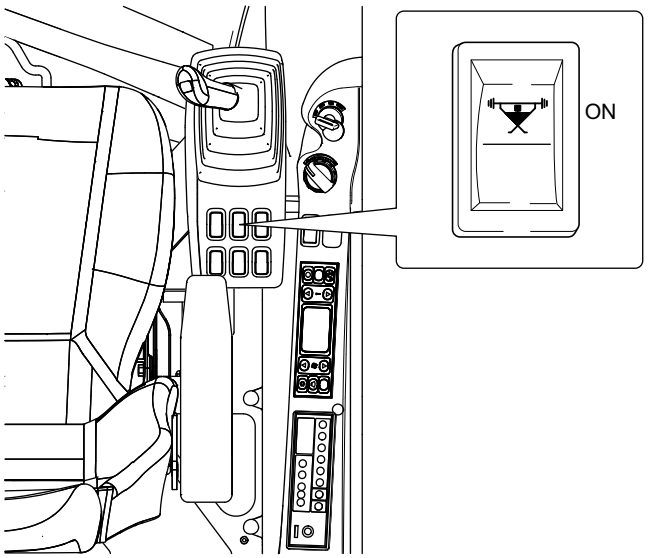

⚠ DANGER

Never turn off the heavy lift switch during any heavy lifting operation.
Sudden or unexpected movement of the lifted load could result in serious injury or death.

Copyright©2022 Kobelco Construction Machinery Co.,Ltd. All rights reserved. [S2LC00054ZE11] [0609CsCshWbYs]

2.4.5 PRESSURE RELEASE SWITCH

The pressure release switch is used to release the inner pressure of hydraulic circuit.

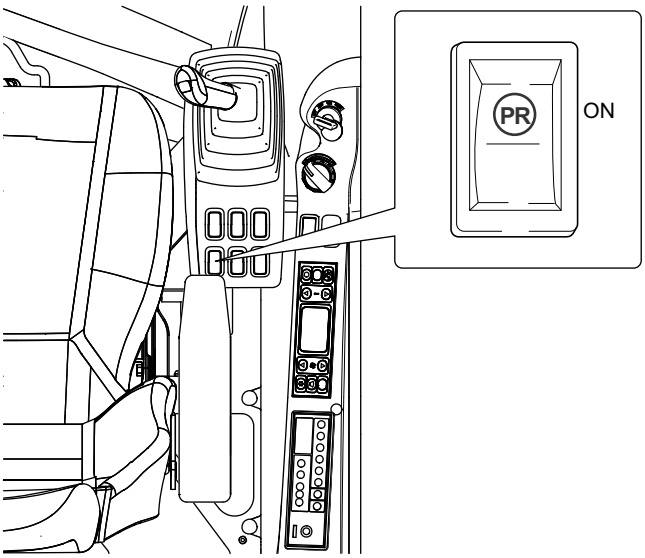

Notice

For pressure releasing procedures, see "RELEASING INNER PRESSURE IN HYDRAULIC SYSTEM" in Chapter 4.

2.4.6 QUICK HITCH OPERATION SWITCH

Use this switch to install and remove the front attachment from the quick hitch.
Move sliding portion (1) of the switch to the direction of the arrow shown in the figure and then push the "LOCK" or "UNLOCK" side to switch the function.
If you release the switch, the switch automatically returns to the neutral position.

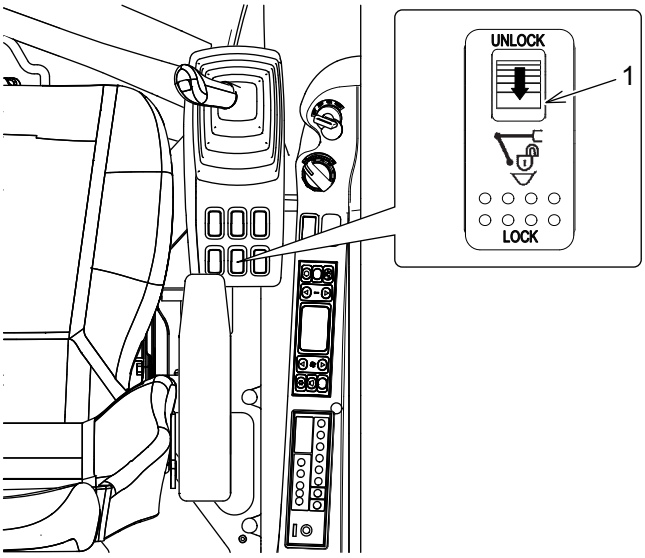

Notice

- The alarm sound keeps going off while the "UNLOCK" or "LOCK" side of the quick hitch operation switch is being pushed.
- For detailed operations, see "REMOVING FRONT ATTACHMENT" and "INSTALLING FRONT ATTACHMENT" sections in Chapter 8.

Copyright©2022 Kobelco Construction Machinery Co.,Ltd. All rights reserved. [S2LC00054ZE11] [0609CsCshWbYs]

2.4.7 CAP (OPTION SWITCH)

This is a place to install an optional switch.

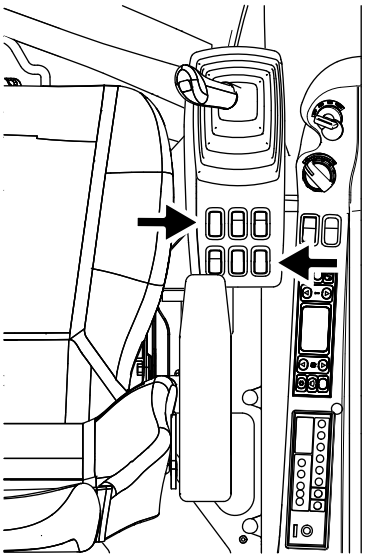

2.4.8 HORN SWITCH

⚠CAUTION

Be sure to sound the horn before starting this machine to warn surrounding personnel.

The horn sounds while the switch located on the top of the left control lever grip is being pressed.

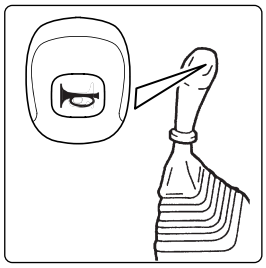

2.4.9 POWER BOOST SWITCH

When power is required for a "particular situation" such as raising boulders and excavating rocks, a significant excavating power is generated while pressing the switch attached on the right control lever grip.

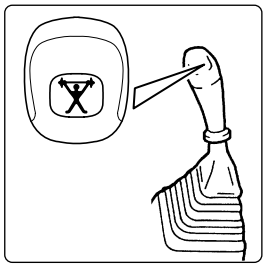

Notice

When a longer arm than standard is equipped, use of the power boost switch is prohibited.

Copyright©2022 Kobelco Construction Machinery Co.,Ltd. All rights reserved. [S2LC00054ZE11] [0609CsCshWbYs]

2.4.10 ENGINE THROTTLE FOR REDUNDANT MODE

This dial is used when the controller that controls this machine has trouble. When the number of engine speed cannot be adjusted with the engine throttle due to controller trouble, operate this engine throttle for redundant mode (1) to adjust the number of engine speed.
Under normal conditions, do not operate engine throttle for redundant mode (1).
When controller warning (2) is displayed on the multi-display, contact your KOBELCO authorized dealer.

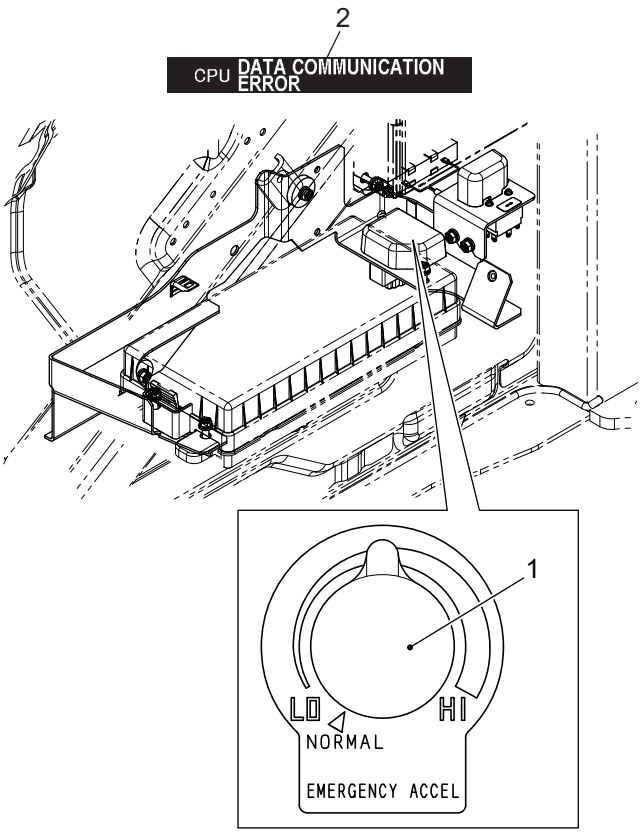

OPERATION PROCEDURES

When operating the emergency accel, follow the procedures below.

WARNING HOW TO HANDLE EMERGENCY ACCEL

Be sure to follow the procedures for the emergency accel. Because the engine speed may rise suddenly when the engine starts, and it is extremely dangerous.

1. Stop the engine, and set emergency accel (1) to "NORMAL".
2. Start the engine.
3. Turn emergency accel (1) to the HI side to adjust the engine speed.
4. When stopping the engine, set emergency accel (1) to "NORMAL".

Copyright©2022 Kobelco Construction Machinery Co.,Ltd. All rights reserved. [S2LC00054ZE11] [0609CsCshWbYs]

2.4.11 SWING PARKING BRAKE RELEASE SWITCH

WARNING SWING PARKING BRAKE RELEASE SWITCH

Do not operate the swing parking brake release switch on slopes and soft grounds.
The upper structure may turn unexpectedly and it is significantly dangerous.

This switch is used only when the swing parking brake cannot be released due to trouble. Set this switch to "RELEASE" to release the brake.
Generally, the switch should be on "NORMAL".
When trouble is found in the swing parking brake systems, contact your KOBELCO authorized dealer promptly.

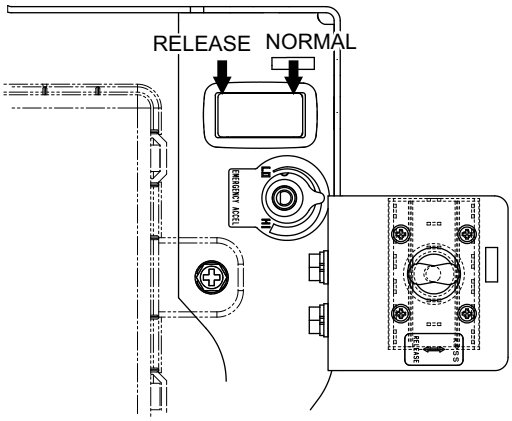

2.4.12 KPSS RELEASE SWITCH

This dial is used when the controller that controls this machine has trouble. When this machine cannot be operated due to the controller trouble, set KPSS release switch (1) to "RELEASE (OFF)" to operate the machine. However, the speed of the machine is limited.
Under normal conditions, the switch should be on "KPSS (WORK MODE)".
When controller warning (2) is displayed on the multi-display, contact your KOBELCO authorized dealer.

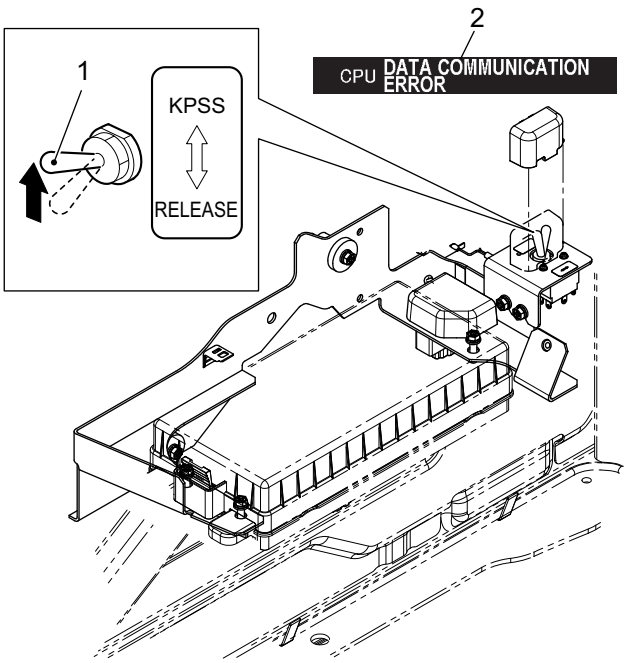

Copyright©2022 Kobelco Construction Machinery Co.,Ltd. All rights reserved. [S2LC00054ZE11] [0609CsCshWbYs]

2.4.13 ENGINE STOP SWITCH

Notice

Do not use this switch to stop the engine under normal conditions.

When the engine does not stop due to trouble and damage of the machine even when turning the starter switch "OFF", lift up the switch near the lower left side of the seat to stop the engine. When not using this switch, always keep the switch down.

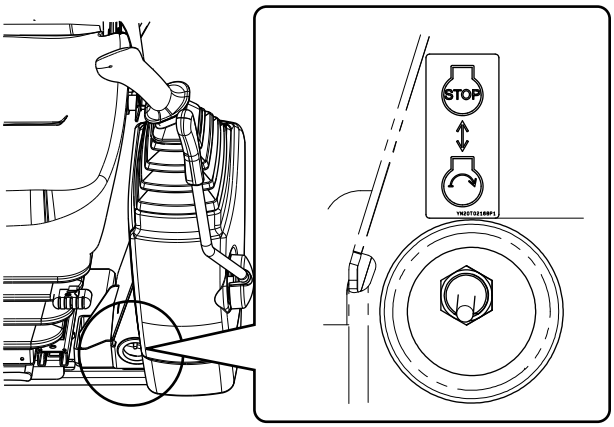

2.4.14 12 V POWER SUPPLY

12 V power supply (1) is installed on the back of the switch cover.
When using accessories such as a fan for general automobiles and other accessories that require the 12 V DC power supply, the 12 V power supply is required. Remove the cover from the 12 V power supply, and insert a 12 V male socket. After using the accessory, put the cover back on.
Maximum continuous output = 180 W

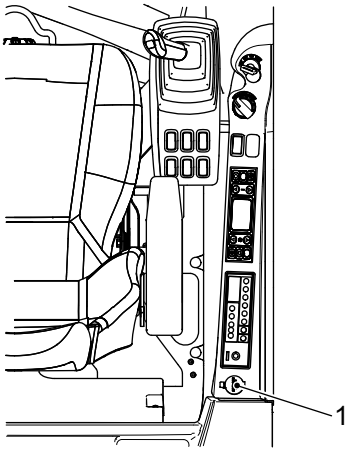

Copyright©2022 Kobelco Construction Machinery Co.,Ltd. All rights reserved. [S2LC00054ZE11] [0609CsCshWbYs]

2.4.15 USB PORT/EXTERNAL INPUT TERMINAL (AUX)

Notice

- This part does not guarantee connection with all types of AUX terminals. Also, when each terminal does not match the inlet of this machine, connection is not available.
- For use of external sound devices, follow the manuals for them respectively.

Using the external input terminal (AUX), you can listen to music from a cell phone and external sound device. The USB port and external input terminal are located on the back of the seat in the cab. When using them, open cap (1), and connect each cable (sold separately). When they are is not used, close cap (1).

USB PORT

Charging is possible by connecting your cable to the USB connector (type A).
* Charging of all devices is not guaranteed.

EXTERNAL INPUT TERMINAL (AUX)

Connect a digital audio player, etc. to listen to music from the machine's speakers. For connection cables, see "HANDLING OF RADIO" in Chapter 2.

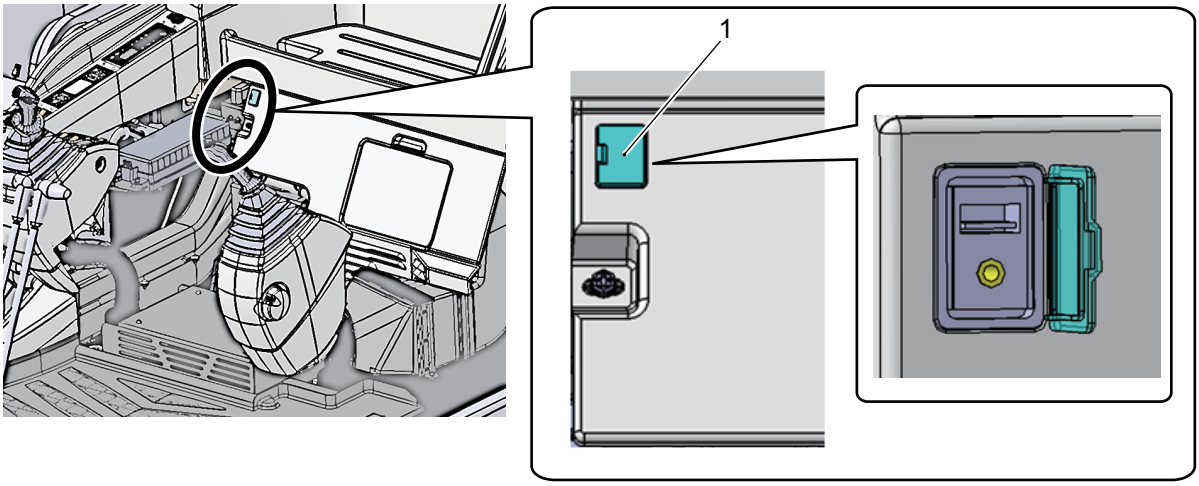

2.4.16 Level Gauge

By monitoring this level-gauge, you can learn whether this machine is kept in a horizontal position.

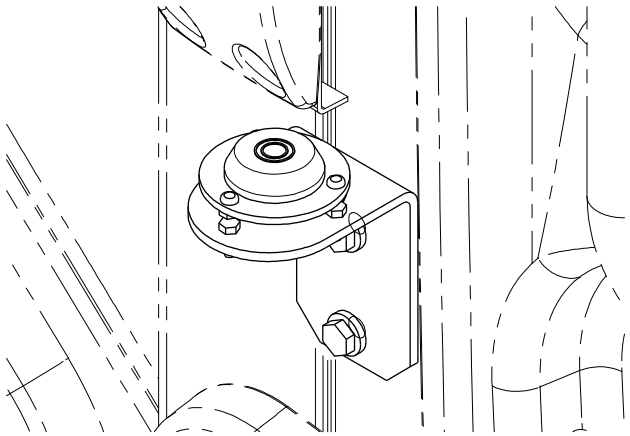

Copyright©2022 Kobelco Construction Machinery Co.,Ltd. All rights reserved. [S2LC00054ZE11] [0609CsCshWbYs]

2.5 HANDLING OF LEVERS AND PEDALS

2.5.1 LOCATION OF LEVERS AND PEDALS

(1) Pilot Control Shut-Off Lever
(2) Operator Control Levers
(3) Travel Levers

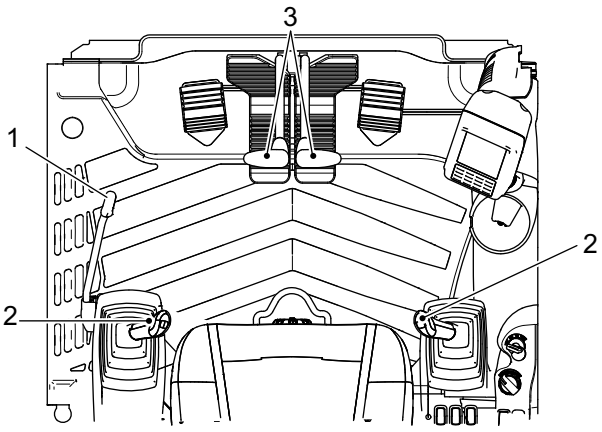

Copyright©2022 Kobelco Construction Machinery Co.,Ltd. All rights reserved. [S2LC00054ZE11] [0609CsCshWbYs]

2.5.2 CONTROL LOCK LEVER

The control lock lever is provided to prevent any unexpected operation due to unexpected contact with the left/right control levers or travel levers.

WARNING HANDLING OF CONTROL LOCK LEVER

- Do not stand up and move during operation, or unexpected contact with the control levers may cause a sudden movement of the machine. Raise the control lock lever securely to the "LOCKED" position before standing up or moving.
- Set the control lock lever to the "LOCKED" position securely, or it may not be locked. Make sure that the control lock lever is at the "LOCKED" position shown in the figure.
- When unlocking, do not touch other levers unintentionally. Touching other levers may cause danger due to unexpected machine movement.
- After completion of work or during transportation, be sure to set the control lock lever to the "LOCKED" position.
- Do not get on and off the machine holding the control lock lever.

LOCKING HYDRAULIC SYSTEM

When the control lock lever is raised to "LOCKED" position (A), the operation control function is locked.

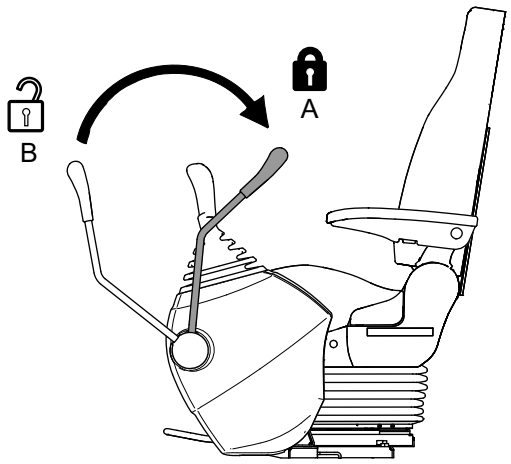

UNLOCKING HYDRAULIC SYSTEM

When the lever is lowered to the "UNLOCKED" position (B), the hydraulic system is unlocked.

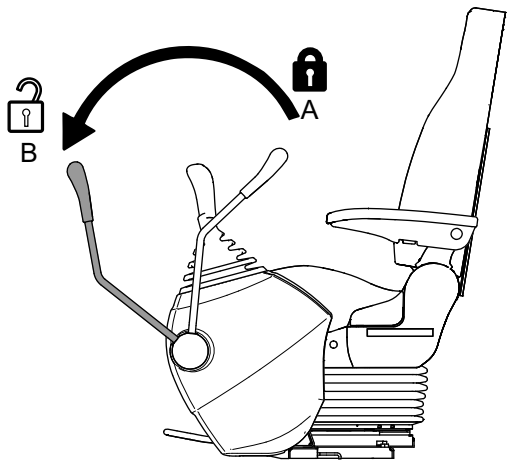

Copyright©2022 Kobelco Construction Machinery Co.,Ltd. All rights reserved. [S2LC00054ZE11] [0609CsCshWbYs]

2.5.3 OPERATOR CONTROL LEVERS

WARNING CONTROL OF LEVERS

- Before operation, be sure to pay attention to the safety of the surroundings and operate each lever slowly to fully make sure that the machine movement is in accordance with the control pattern indicated on the control pattern label in the cab.
- If you operate the machine while the control pattern label in the cab does not match the actual machine movement, it may cause severe personal injury.
- When the label does not match the actual machine movement, replace them with a proper one.
- When stopping swing operation, stop it earlier than your intended position by taking the swing distance after returning the swing lever to the neutral position into account.

The swing operation and the attachment/equipment are operated with the left and right control levers.
The left control lever is used for swing and arm operations.
The right control lever is used for boom and bucket operations.
Release the lever to return it to the neutral position and stop the attachment/equipment from moving. It is possible to perform various operations at the same time.

Left control lever

(1)Swing right

(2)Swing left

(3)Arm out

(4)Arm in

N (Neutral): Upper structure and arm are held in the position at that time

Right control lever

(5)Boom down

(6)Boom up

(7)Bucket in

(8)Bucket out

N (Neutral): Boom and bucket are held in the position at that time

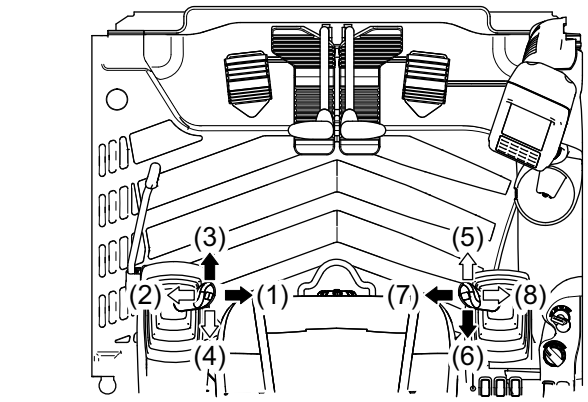

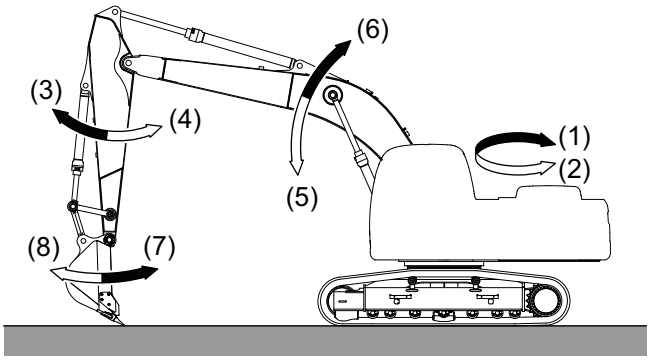

Copyright©2022 Kobelco Construction Machinery Co.,Ltd. All rights reserved. [S2LC00054ZE11] [0609CsCshWbYs]

2.5.4 TRAVEL LEVER & PEDAL

WARNING HANDLING OF THE TRAVEL LEVER & PEDAL

- During travel operation, pay attention to the control levers. There is a possibility of accident because the attachment is suddenly swung and moved by the unexpectedly touching and shifting the control lever.
- When operating the travel levers, check the crawler frame direction. When the travel motor is positioned on the front side, the traveling lever operation is reversed.
- If you put your foot on a pedal during work, there is a possibility of severe injury because the machine will start abruptly if the pedal is depressed unintentionally. Do not put your foot on a pedal, except for driving or turning with pedals.
- Pay attention when driving and operating with pedals.

The manual levers and travel pedals are used for the travel operation of this machine.
(a) Travel forward: Push the travel levers to the front (Depress the front of travel pedals)
(b) Travel backward: Pull the travel levers toward yourself (Depress the back of travel pedals)
(N) Neutral: The machine stops traveling.

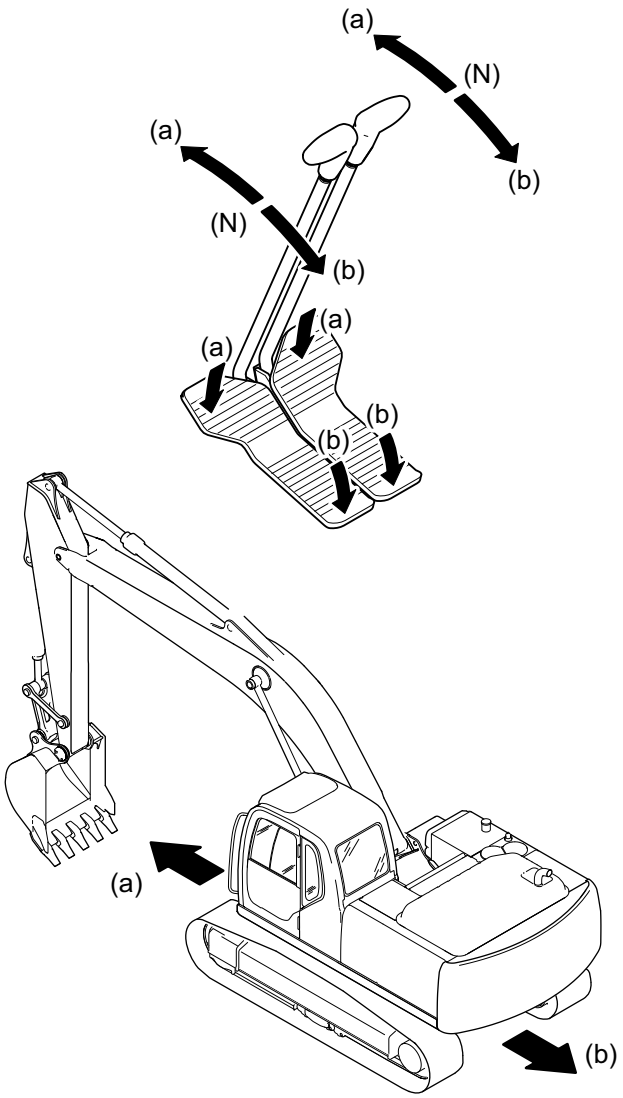

Copyright©2022 Kobelco Construction Machinery Co.,Ltd. All rights reserved. [S2LC00054ZE11] [0609CsCshWbYs]

2.6 HANDLING OF FUSE & RELAY BOX

2.6.1 ABOUT FUSE & RELAY BOX

The fuses protect the wiring and electrical components from damage of burning out due to excess current. If the electrical system does not work properly, check to replace any blown fuses with new ones. If there is a corroded fuse generating white powder on it, or if some looseness exists between a fuse and its fuse holder, replace it as well.

2.6.2 REPLACING FUSES

⚠CAUTION

Make sure the starter switch is in the "OFF" position when replacing fuses.

Notice

- The spare fuses are stored in the fuse & relay box.
- A fuse must be replaced with a one of the same type and capacity of that of the blown fuses. The electrical system may be damaged if a different one is used.
  If fuse replacement is frequently required, it may be due to a failure in the electrical system. Please contact KOBELCO authorized dealer/distributor.

1. To remove the fuse box cover at the right side of the operator's seat, push lock part (2) of cover (1) inward and release the lock and then lift the cover.
2. When replacing the fuse, use a fuse extractor to remove it from the fuse box.
3. After replacing the fuse, install the cover securely.

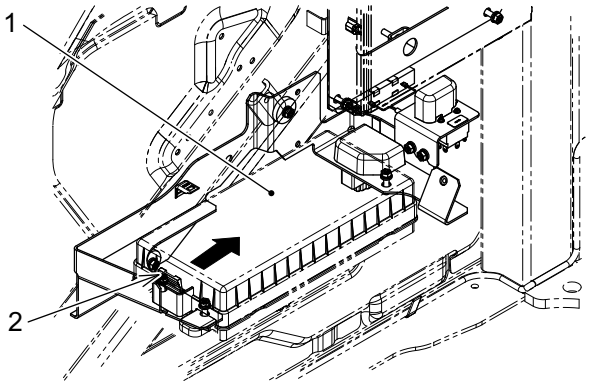

Copyright©2022 Kobelco Construction Machinery Co.,Ltd. All rights reserved. [S2LC00054ZE11] [0609CsCshWbYs]

2.6.3 FUSE CAPACITY AND CIRCUIT NAME

The following shows each fuse capacity and circuit name.

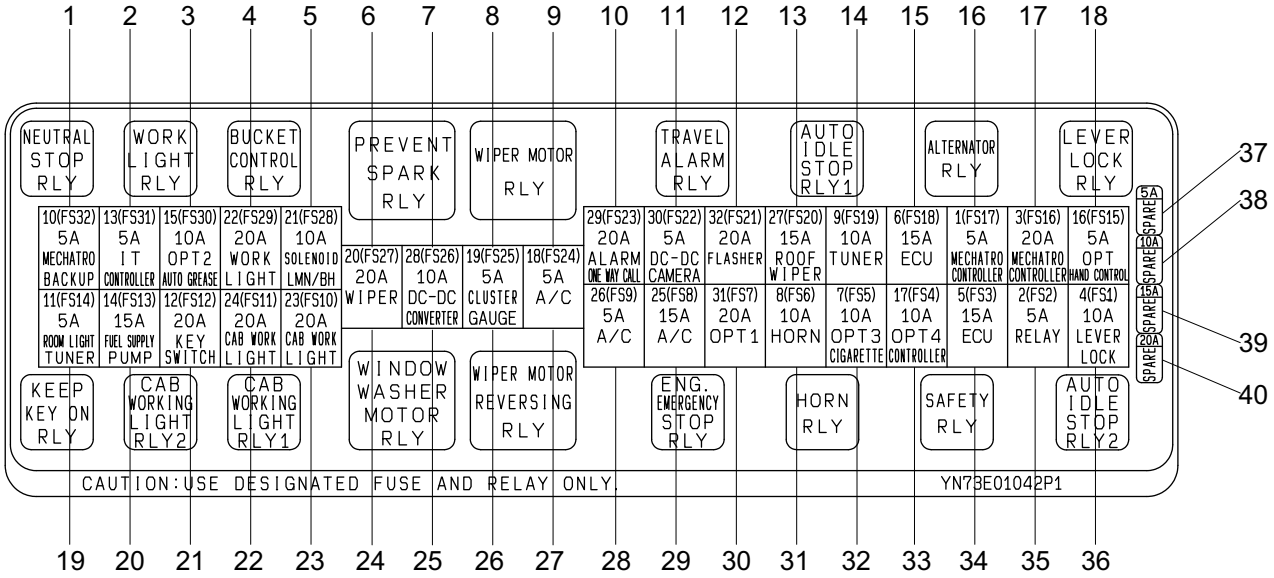

Item	Capacity	Circuit Name	Item	Capacity	Circuit Name
1	5A	Mechatro controller (backup)	21	20A	Key switch
2	5A	IT controller	22	20A	Cab working light
3	10A	Automatic greasing	23	20A	Cab working light
4	20A	Working light	24	20A	Wiper
5	10A	Solenoid valve, LMN/BH	25	10A	DC-DC converter
6	20A	Wiper	26	5A	Cluster gauge
7	10A	DC-DC converter	27	5A	Air conditioner
8	5A	Cluster gauge	28	5A	Air conditioner
9	5A	Air conditioner	29	15A	Air conditioner
10	20A	Travel alarm, public address system	30	20A	Option 1
11	5A	DC-DC for camera	31	10A	Horn
12	20A	Flasher	32	10A	Option 3
13	15A	Skylight wiper	33	10A	Option 4, controller
14	10A	Tuner	34	15A	Engine controller (ECU)
15	15A	Engine controller (ECU)	35	5A	Relay
16	5A	Mechatro controller	36	10A	Lever lock
17	20A	Mechatro controller	37	5A	Spare fuse
18	5A	(Option) hand control	38	10A	Spare fuse
19	5A	Room lamp, tuner	39	15A	Spare fuse
20	15A	Fuel supply pump	40	20A	Spare fuse

Copyright©2022 Kobelco Construction Machinery Co.,Ltd. All rights reserved. [S2LC00054ZE11] [0609CsCshWbYs]

2.7 HANDLING OF FUSIBLE LINK (FOR STARTER)

CAUTION

Do not use the battery power-off switch for any other purposes than described in this manual.
Never set the switch to the OFF position while the engine is running.
The electronic devices may be damaged.

Notice

- When setting the battery power-off switch to the OFF position, all electrical circuits are shut down, and the preset memory and clock memory of the radio are cleared.
- The fusible link is a fuse wiring of big size provided in a large capacity circuit.
  As with normal fuses, it protects electrical components and wiring from burn out due to excess current.

Copyright©2022 Kobelco Construction Machinery Co.,Ltd. All rights reserved. [S2LC00054ZE11] [0609CsCshWbYs]

In case the starter does not work when the starter switch is turned "ON", disconnection of the fusible link is suspected. Check and replace it as needed.

2.7.1 FUSIBLE LINK INSPECTION/REPLACEMENT

1. Use the starter key to open the side door at the left side of the machine and hold it with the stay.
2. Turn the battery power-off switch OFF.
   ON: Turn the key to the right to connect the electrical circuit.
   OFF: Turn the key to the left to shut down the electrical circuit.
3. Remove three mounting bolts (2) from the fuse and the relay box two mounting sems bolts (3) from the battery power-off switch, and remove the cover.
4. Remove fusible link (1), and perform inspection or replace it with a new one.
5. Remove the supporting stay, and close the side door.

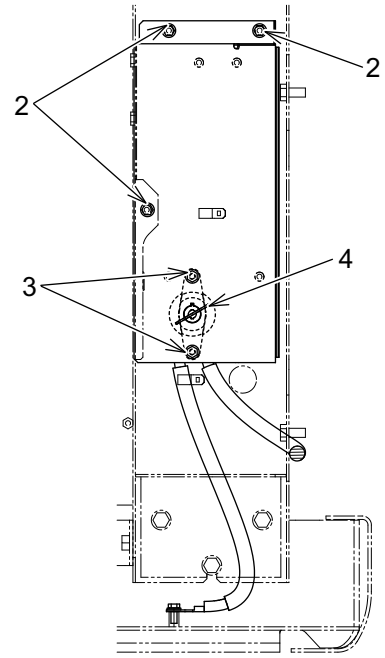

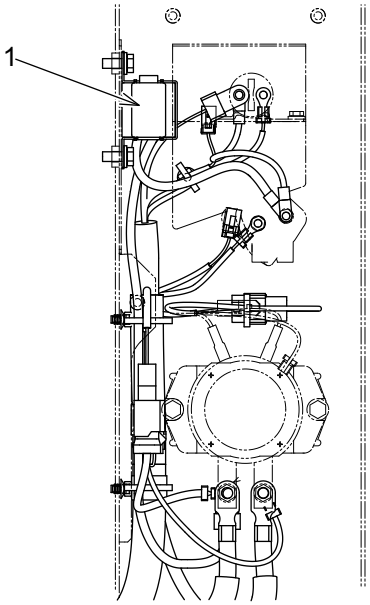

Copyright©2022 Kobelco Construction Machinery Co.,Ltd. All rights reserved. [S2LC00054ZE11] [0609CsCshWbYs]

2.8 CONTROLLER

The controller that controls the machine and the engine is equipped in this machine.

⚠CAUTION

- Since the controller is equipped in the cab and the engine, do not splash water, dirt, or drinking water etc on it. It may cause failure of the machine.
- When the controller warning is displayed on the gauge cluster, contact your KOBELCO authorized dealer.

Copyright©2022 Kobelco Construction Machinery Co.,Ltd. All rights reserved. [S2LC00054ZE11] [0609CsCshWbYs]

2.9 HANDLING OF RADIO TUNER

CAUTION

Do not operate the radio during operation.
Lower the attachment to the ground, pull up the control lock lever to the "LOCKED" position, and then operate the radio.

2.9.1 NAME OF EACH PART

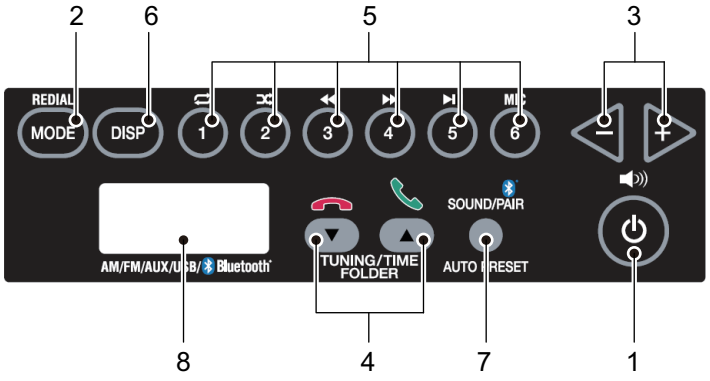

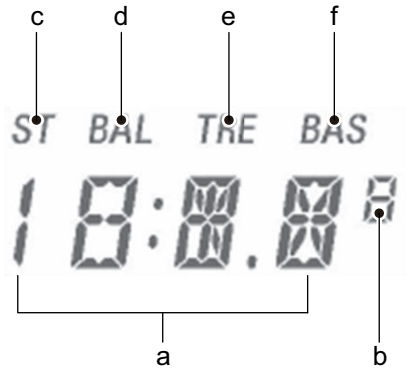

Item	Name	Function
1	[PWR] Key	Turns the power of the radio ON/OFF. In each explanation, "ON" is described as "OnAir".
2	[MODE] Key	Switches the band (AM/FM1/FM2) and the radio (AM/FM1/FM2), AUX, and BT(Bluetooth). If pressed and hold, redial is performed.
3	[VOL+] [VOL-] Key	Adjusts the volume.
4	[UP] [DOWN] Key	Switches the frequency, adjusts steps at the sound adjustment, and adjusts the clock. Also, when a call is received, press [UP] to start conversation, and press [DOWN] to finish the conversation.
5	[PRESET] Key (1 to 6)	Recalls and registers preset frequency. Also, in use of BT(Bluetooth), performs repeat, random, track forward/ backward, and pause.
6	[DISP] Key	Switches the display (frequency/clock).
7	[SOUND PAIR] Key	Adjusts the sound (balance/bass/treble) and performs pairing.
8	LCD Display	Displays the frequency and the clock.
a	Segment (Large)	Displays the letter/value information such as the name of the source, the frequency, and the clock.
b	Segment (Small)	Displays the frequency at the step of FM50kHz.
c	ST Pict	Turns on if stereo sound is received with FM1/FM2 selected.
d	BAL Pict	Turns on at balance adjustment in sound adjustment.
e	TRE Pict	Turns on at treble adjustment in sound adjustment.
f	BAS Pict	Turns on at bass adjustment in sound adjustment.

Copyright©2022 Kobelco Construction Machinery Co.,Ltd. All rights reserved. [S2LC00054ZE11] [0609CsCshWbYs]

2.9.2 ON-AIR (NORMAL CONDITION)

With the radio component in the OFF condition, press [PWR] key to turn the radio ON (on-air condition). Then the frequency selected now starts to be received.



OFF (clock display)
{Colon blinks (ON: 700 ms, OFF: 300 ms)}

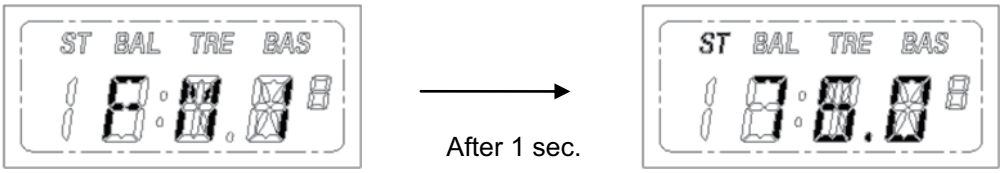

ON (on-air): Band name display

In this condition, press [DISP] key to switch the frequency display and the time display.
If the source is AUX, the AUX display and the clock display are switched.
(When the clock display is switched to the frequency display, the band name is displayed for 1 sec. and then the display is changed to the frequency display.)

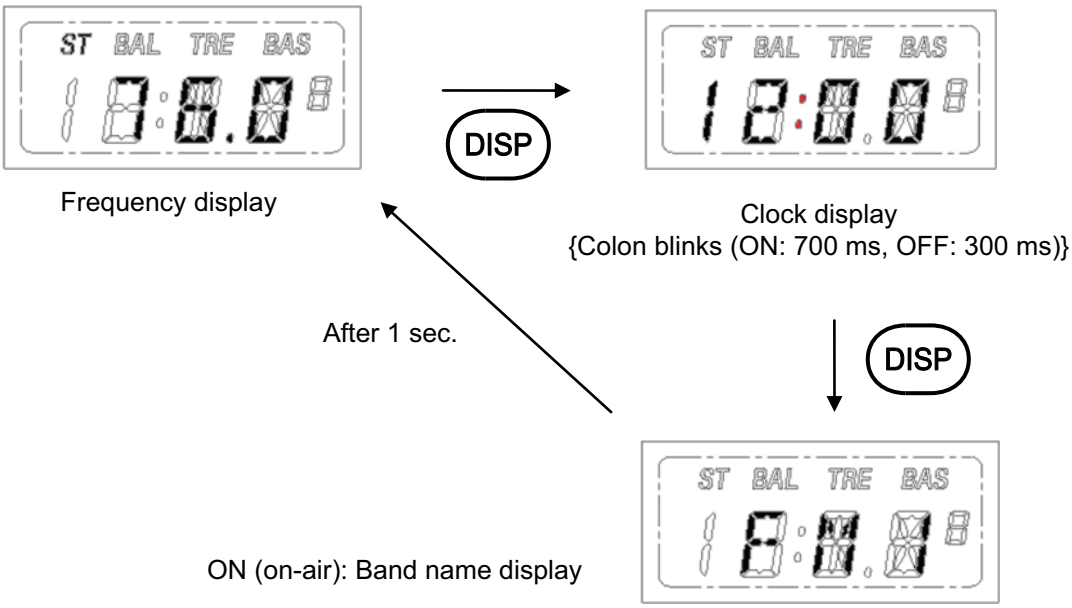

Frequency display

Clock display
{Colon blinks (ON: 700 ms, OFF: 300 ms)}

ON (on-air): Band name display

Copyright©2022 Kobelco Construction Machinery Co.,Ltd. All rights reserved. [S2LC00054ZE11] [0609CsCshWbYs]

2.9.3 SWITCHING SOURCE

With the radio component in the on-air (normal) condition, press [MODE] key to switch the source.
After the source is switched, each source works as follows.

- AM/FM: Receives the frequency received at the previous time by the selected band.
- AUX: Outputs the sound of the device connected to the AUX terminal from the speakers of this radio component.
- BT: Outputs the sound of the device connected though Bluetooth (A2DP) from the speakers of this radio component.

The sources are switched in the order of AM→FM1→FM2→AUX→BT→AM.

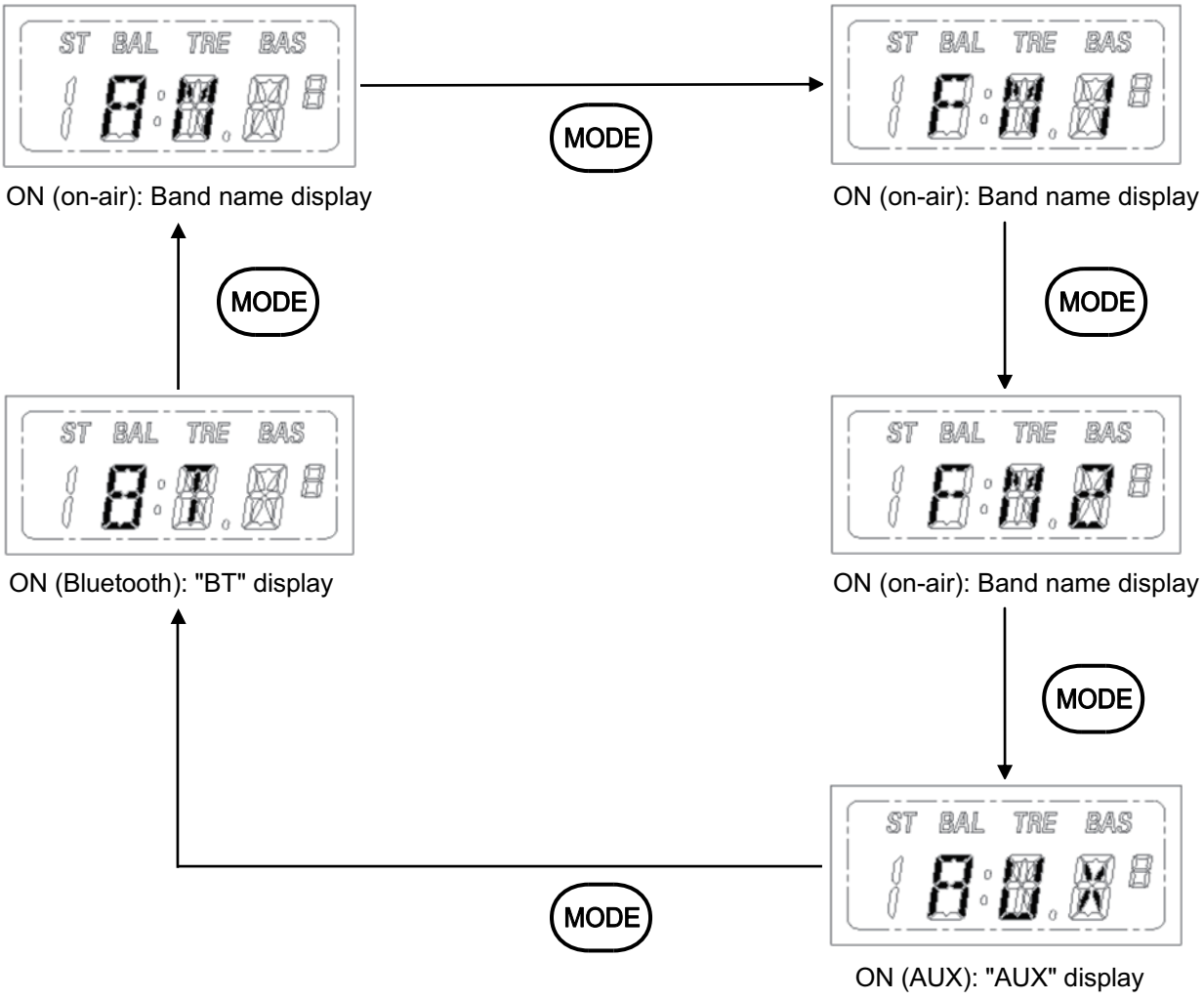

Copyright©2022 Kobelco Construction Machinery Co.,Ltd. All rights reserved. [S2LC00054ZE11] [0609CsCshWbYs]

2.9.4 FM/AM

FREQUENCY ADJUSTMENT (1 STEP UP OR 1 STEP DOWN)

With the radio component in the on-air (normal) condition, press [UP] key to increase the frequency by 1 step.
Also, press [DOWN] key to decrease the frequency by 1 step.

(In case that selected band is FM1/FM2)



Frequency display
(When stereo sound is received, "ST" pict turns on)

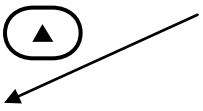



Frequency display
(When stereo sound is not received, "ST" pict turns off)



Frequency display
(When stereo sound is not received, "ST" pict turns off)

(In case that selected band is AM)



Frequency display
(When AM is selected, ST" pict always turns on)

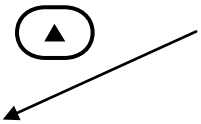

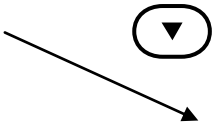

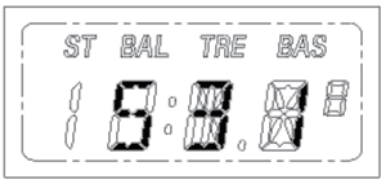

Frequency display
(When AM is selected, ST" pict always turns on)



Frequency display
(When AM is selected, ST" pict always turns on)

Copyright©2022 Kobelco Construction Machinery Co.,Ltd. All rights reserved. [S2LC00054ZE11] [0609CsCshWbYs]

FREQUENCY ADJUSTMENT (AUTOMATIC SEEKING)

With the radio component in the on-air (normal) condition, press and hold [UP] key to increase the frequency by 1 step consecutively.
Also, press and hold [DOWN] key to decrease the frequency by 1 step consecutively.
When the well-received frequency is detected, the auto seeking operation stops and the radio becomes the on-air condition.

(In case that selected band is FM1)

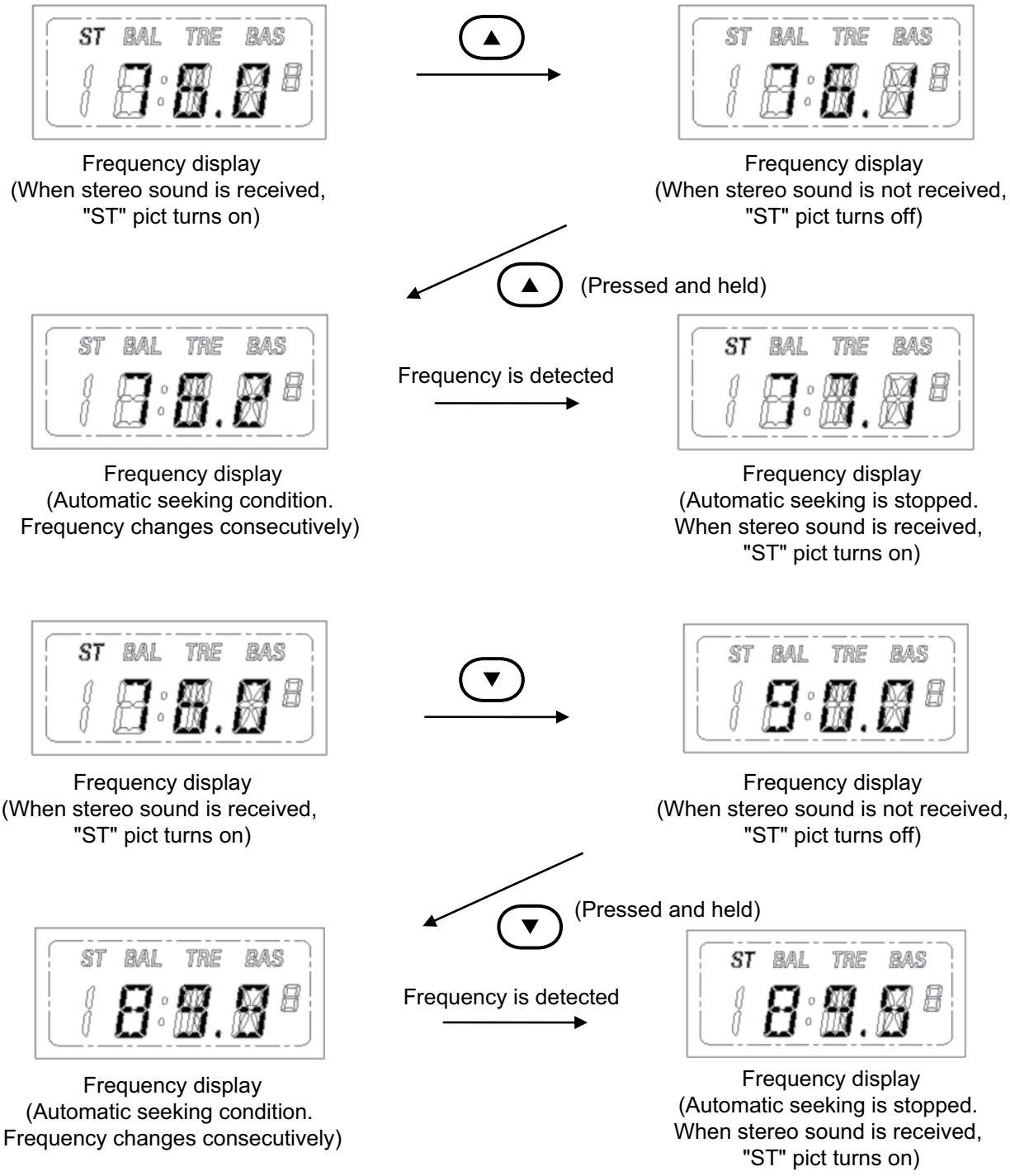

Copyright©2022 Kobelco Construction Machinery Co.,Ltd. All rights reserved. [S2LC00054ZE11] [0609CsCshWbYs]

FREQUENCY ADJUSTMENT (AUTOMATIC PRESETTING)

With the radio component in the on-air (normal) condition, press and hold [SOUND/PAIR] key to start the automatic presetting function of which the well-received frequency is detected and stored in the preset memories of 1 to 6 automatically.
In the presetting function, the frequencies are set to the preset memories of 1 to 6 in the order of strongly received radio waves.
During operation of the automatic presetting function, the following automatic presetting display (the display position of "A" is renewed at every certain period) is displayed and when the operation is finished (with 2 beep sounds), this display is turned off and the frequency stored in preset 1 is on-aired.

(In case that selected band is FM1)

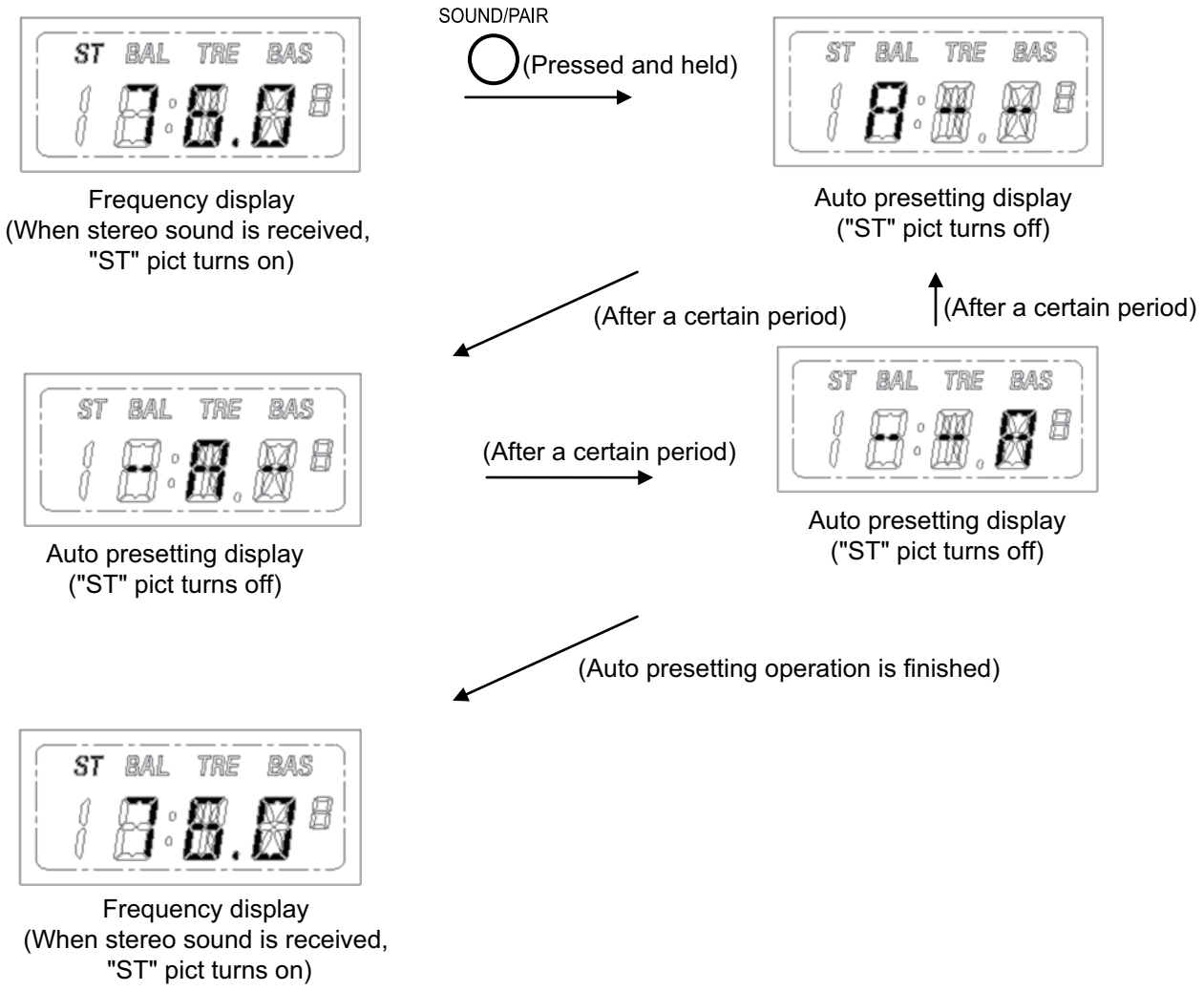

Copyright©2022 Kobelco Construction Machinery Co.,Ltd. All rights reserved. [S2LC00054ZE11] [0609CsCshWbYs]

RECALLING PRESET FREQUENCY

With the radio component in the on-air (normal) condition, press any of [PRESET] key (1 to 6) to recall the frequency stored in that preset number and on-air it.

{In case that selected band is FM1 (76.0 MHz has already been stored in preset No.1)}

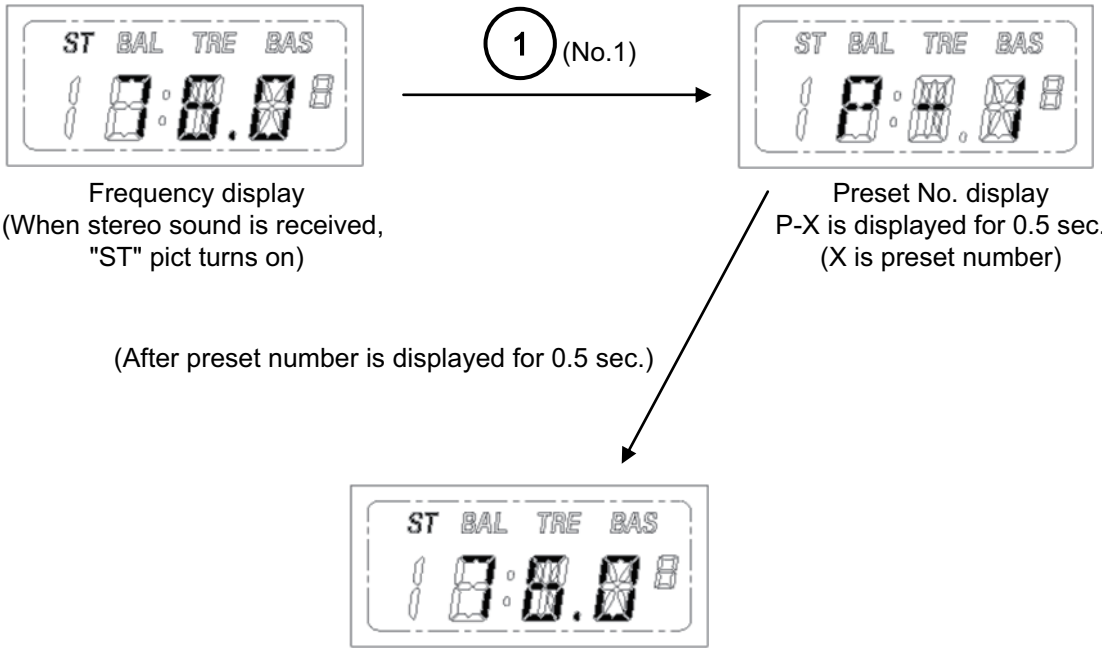

Frequency display
(When stereo sound is received, "ST" pict turns on)

Preset No. display
P-X is displayed for 0.5 sec.
(X is preset number)

Frequency display
(When stereo sound is received, "ST" pict turns on)

Copyright©2022 Kobelco Construction Machinery Co.,Ltd. All rights reserved. [S2LC00054ZE11] [0609CsCshWbYs]

PRESET MEMORY

If any one of [PRESET] keys (1 to 6) is pressed and held under the on-air (normal) condition, the frequency received now is stored to that preset number.
At this time, the preset number display blinks 3 times and then the frequency display turns on.

(In case that selected band is FM1)

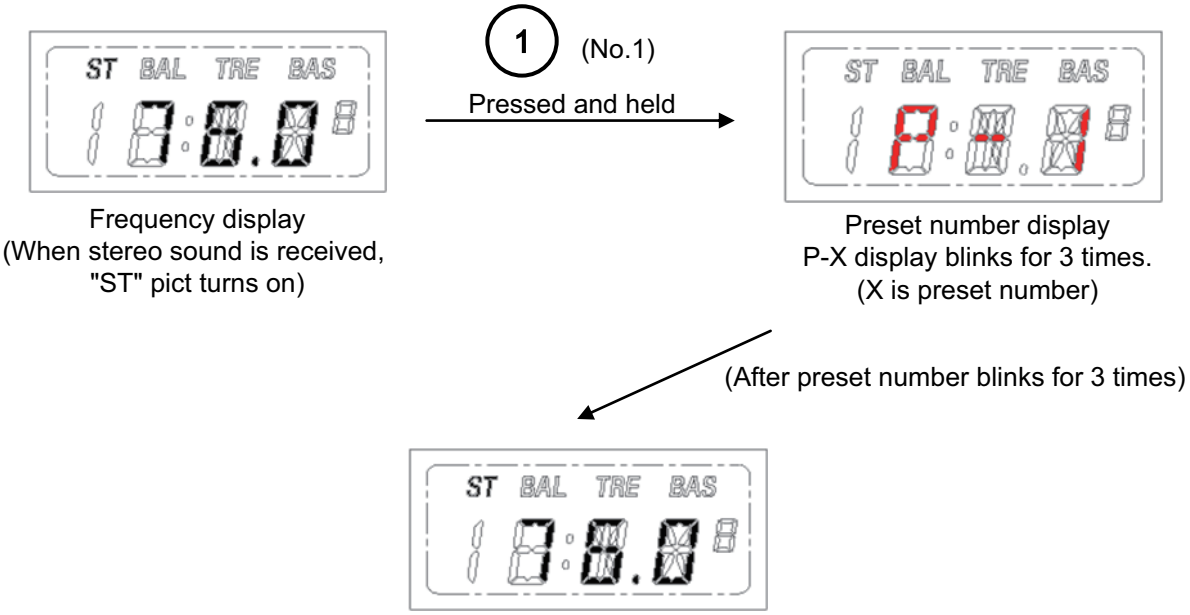

Frequency display
(When stereo sound is received, "ST" pict turns on)

Preset number display
P-X display blinks for 3 times.
(X is preset number)

Frequency display
(When stereo sound is received, "ST" pict turns on)

Copyright©2022 Kobelco Construction Machinery Co.,Ltd. All rights reserved. [S2LC00054ZE11] [0609CsCshWbYs]

2.9.5 BLUETOOTH AUDIO FUNCTION, AND EXTERNAL INPUT TERMINAL

Using the Bluetooth Audio function, and external input terminal (AUX) of this machine, you can listen to music from a cell phone and external sound device.

Notice

Bluetooth Audio

- The Bluetooth Audio function of this machine does not guarantee wireless connection with all types of devices supporting Bluetooth. Devices like cell phones, etc. to be connected need to meet the Bluetooth standard determined by SIG and to be certified. Even if devices to be connected meet the Bluetooth standard, some devices may have connection problems, display/operation differences, or skipping sound.
- For the use of Bluetooth, follow the instruction manual of each device.
- Bluetooth in this machine may adversely affect some medical electric devices such as a cardiac pacemaker. When using Bluetooth Audio near medical electric devices, be very careful and ask applicable medical electric device manufacturers beforehand for use of Bluetooth.

EXTERNAL INPUT TERMIANL (AUX)

- External input terminal in this machine do not guarantee connection with all types of AUX terminal. Also, when each terminal does not match the inlet of this machine, a connection is not available.
- For use of external sound devices, follow the manuals for them respectively.

Basic specification of Bluetooth

Item	Contents
Bluetooth version	5.0
Field intensity	Class 1
Maximum number of devices for paring registration	8 units
Supported profile	A2DP / AVRCP/ HFP / SPP
Frequency range	2402 — 2480 MHz
Modulation system	GFSK, π/4–DQPSK, 8–PSK
Output power	Max. 10.0dBm e.i.r.p

USB CHARGE

- Charging is possible by connecting your cable to the USB connector (type A).
- * Charging of all devices is not guaranteed.

Copyright©2022 Kobelco Construction Machinery Co.,Ltd. All rights reserved. [S2LC00054ZE11] [0609CsCshWbYs]

2.9.6 PAIRING (REGISTRATION OF DEVICES)

Bluetooth devices need prior registration of devices to be connected by each other. This registration is called "pairing".
The pairing is required between this radio component and a mobile phone or other Bluetooth device.
With the OnAir (normal) condition, push the [MODE] key and switch the band to Bluetooth condition.
With the band selecting Bluetooth, press and hold [SOUND/PAIR] to display "WA" and start the preparation of the pairing.
After the preparation of this radio component is finished, "PA" is displayed, and this radio component enters the paring waiting condition.
If a device is searched from the Bluetooth device to be connected to this radio component, the screen of that Bluetooth device displays "BT-****" (* is 4 digits of English letters and numbers). The pairing operation shall be performed from the Bluetooth device to be connected.
If the paring is performed normally, "P0" is displayed and the pairing is finished normally.
When the pairing is not completed within the limited time (180 sec.) or error occurs, "PX" is displayed and the radio component returns to the Bluetooth ON condition.
During the pairing operation, by pressing [PWR] key, the pairing is canceled.
* Some mobile phones need entering of a pass key. Enter "0000" as a pass key.

Copyright©2022 Kobelco Construction Machinery Co.,Ltd. All rights reserved. [S2LC00054ZE11] [0609CsCshWbYs]

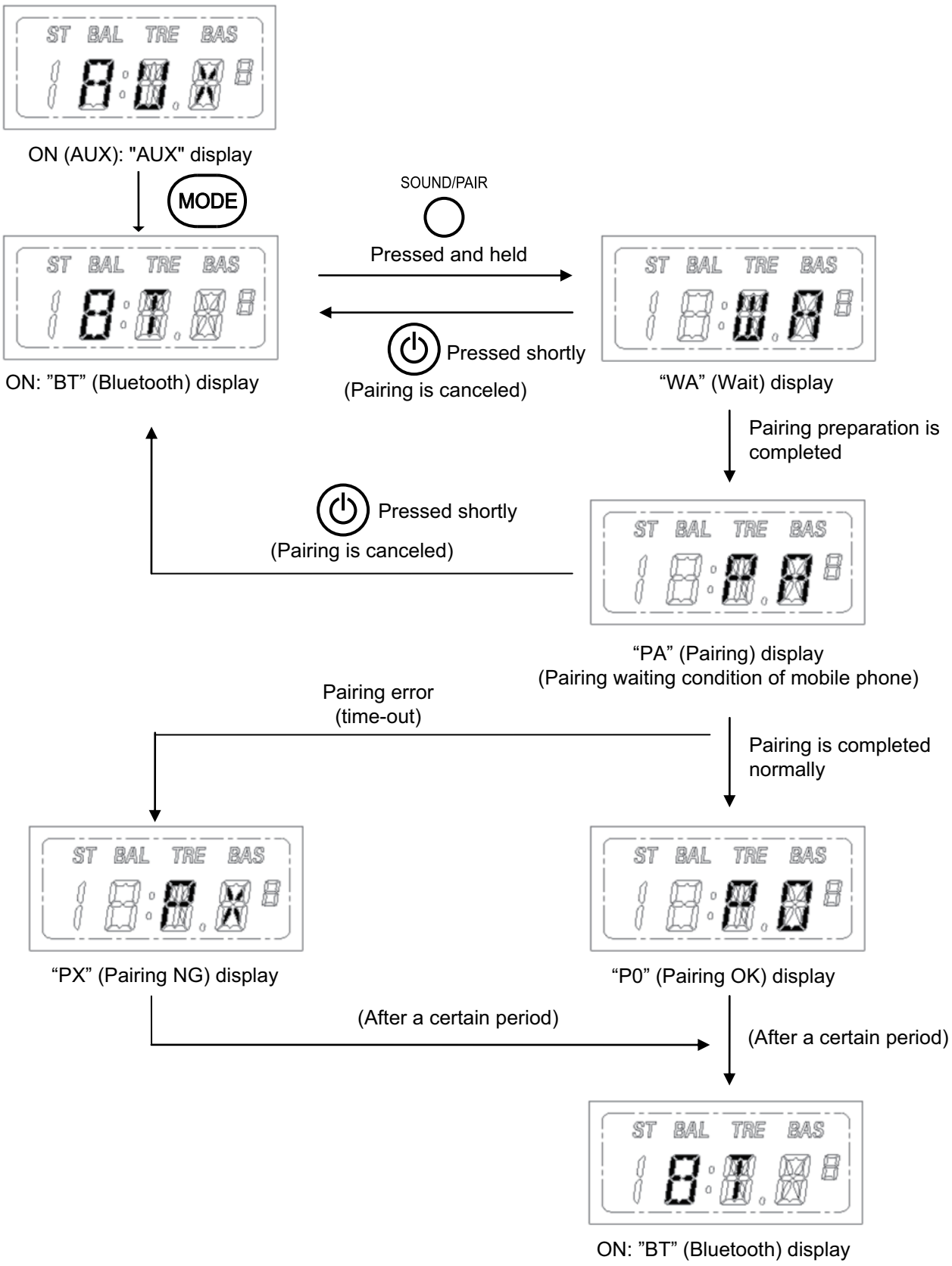

Copyright©2022 Kobelco Construction Machinery Co.,Ltd. All rights reserved. [S2LC00054ZE11] [0609CsCshWbYs]

2.9.7 TELEPHONE FUNCTION

Before using this function, perform pairing (registration of a device).

CONVERSATION

If the mobile phone connected through Bluetooth receives a phone call, regardless of the band selected at that time, "CL" is displayed and blinked and the ringtone is output from the speakers.
Even when this radio component is OFF, it automatically turns ON when receiving a phone call, and then displays and blinks "CL", and outputs the ringtone.
With the radio component receiving a phone call, press [UP] key to answer the phone call.
If the telephone number for which incoming call rejection has been performed is received, the radio component does not enter the communication status but changes to the band selected before receiving the phone call.
During the telephone conversation, by pressing [DOWN] key, the conversation is finished and the radio component changes to the status before receiving the phone call.
Moreover, by pressing [PRESET 6] key, the microphone can be turned OFF/ON.
When the microphone is turned OFF, input of the speaker's voice is stopped.

The previous turning OFF of the microphone is not stored. It is canceled by every time.

(In case that selected band is FM1)

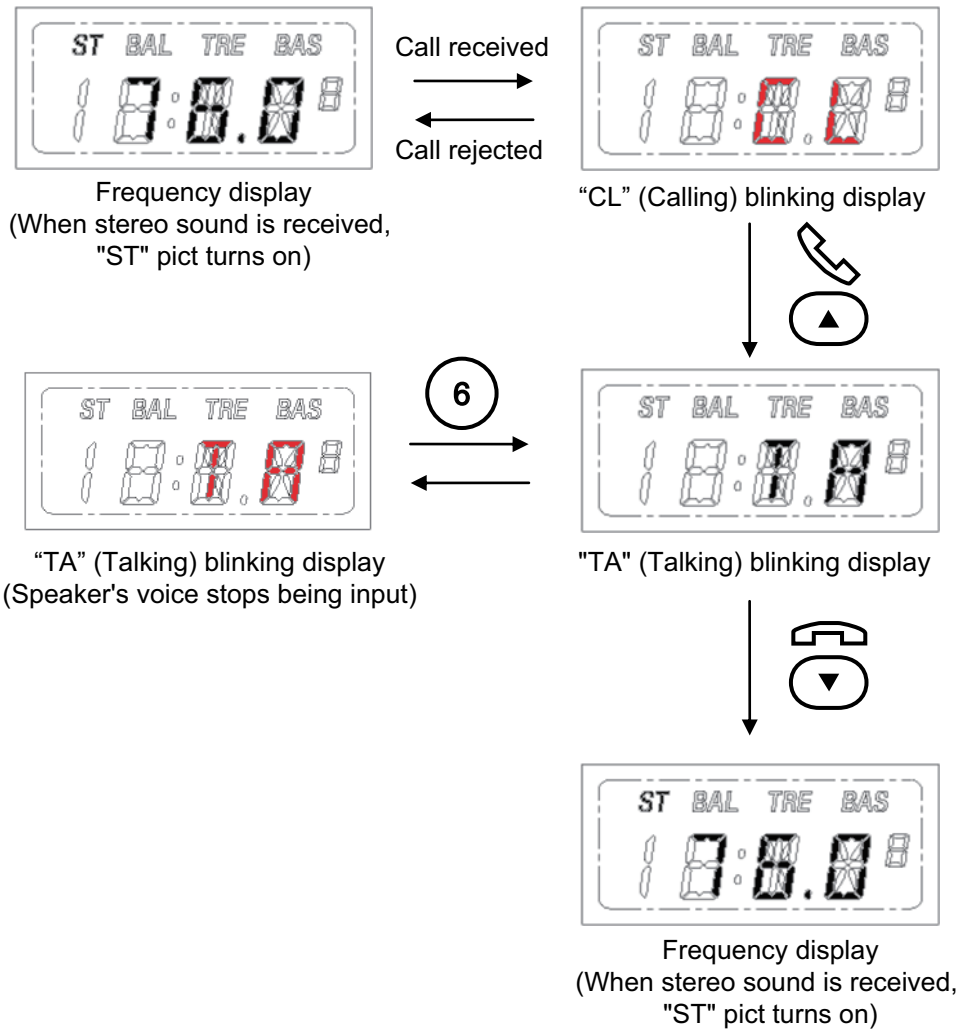

Copyright©2022 Kobelco Construction Machinery Co.,Ltd. All rights reserved. [S2LC00054ZE11] [0609CsCshWbYs]

REDIALING

Regardless of the band selected now, by pressing and holding [MODE] key, "RE" is displayed for 3 sec. and after redialing is started, "DL" is displayed and blinked, and the ringtone is output from the speakers.
Even when this radio component is OFF, it automatically turns ON when performing redialing and enters the redialing process.
While making a phone call, if it is canceled, the radio component returns to the status before making the phone call.

The redialing function redials the telephone number received last time, after ACC ON.
If a phone call is received for a short time, some mobile phones cannot be applied to redialing.

(In case that selected band is FM1)

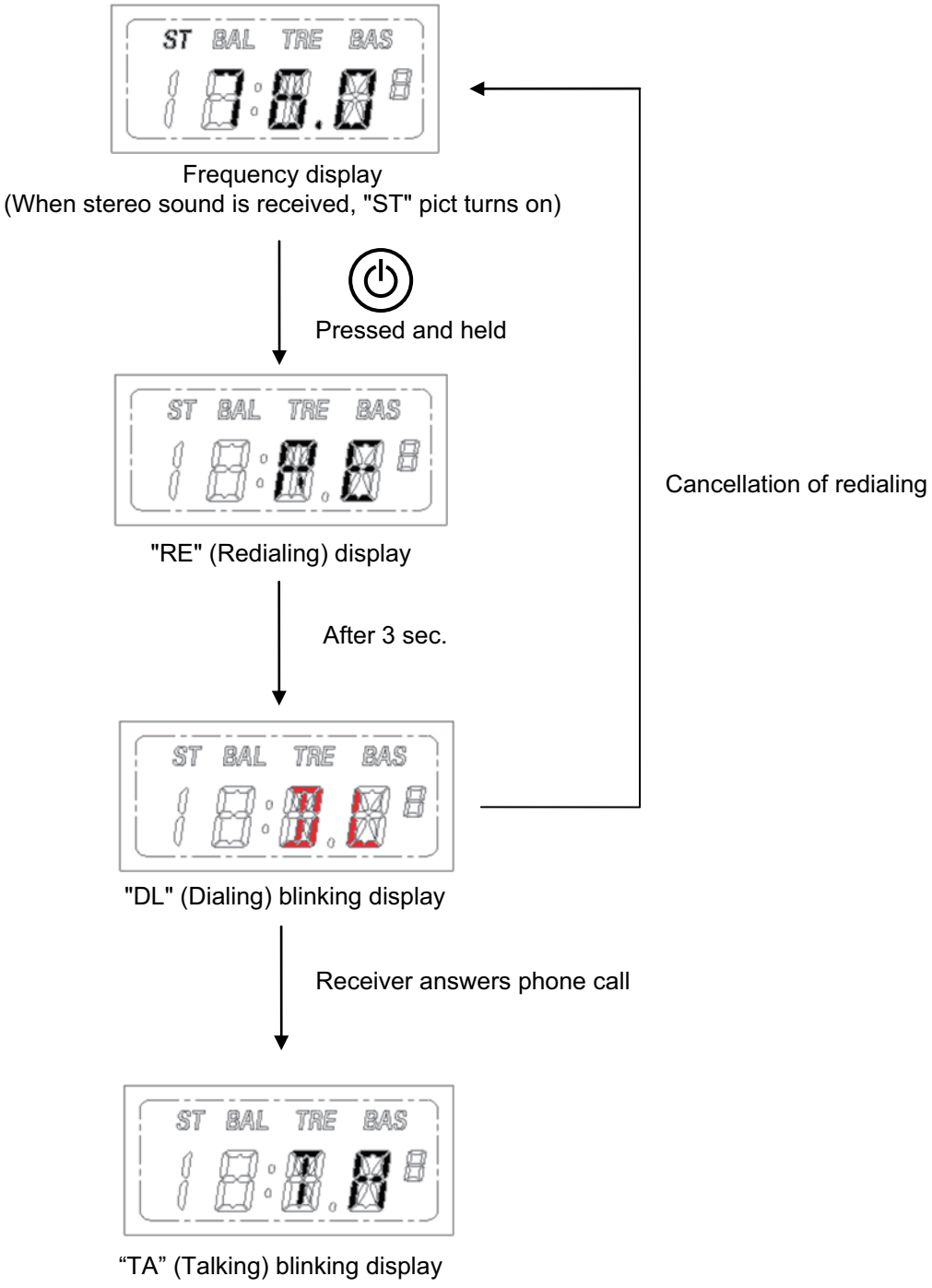

Copyright©2022 Kobelco Construction Machinery Co.,Ltd. All rights reserved. [S2LC00054ZE11] [0609CsCshWbYs]

2.9.8 FILE PLAYING FUNCTION

Before using this function, pairing (registration of a device) shall be done.

TRACK FORWARD/BACKWARD (BT-AUDIO)

While a BT-Audio is being played, press [PRESET 3] or [PRESET 4] to change the track forward/backward.

If moving track backward is operated after less than 1 sec. from the start of playing the track, the track moves to the previous track, however, in case of 1 sec. or more from the start, the playing part moves to the beginning of the same track.
Due to the Bluetooth device limitation, the track number cannot be displayed.

PAUSE (BT-AUDIO)

While the BT-Audio is being played, press [PRESET 5] to pause the track.
By pressing [PRESET 5] again, the track starts playing.
Due to the Bluetooth device limitation, during pause, the display does not blink.

Copyright©2022 Kobelco Construction Machinery Co.,Ltd. All rights reserved. [S2LC00054ZE11] [0609CsCshWbYs]

2.9.9 VOLUME CONTROL

If [VOL +] key is pressed under the on-air (normal) condition, the volume level is increased by 1 step.
The setting range is 0 to 32 steps.
Pressing and holding the key makes the volume increase consecutively.
By pressing [VOL -] key, the volume level is decreased by 1 step.
Pressing and holding the key makes the volume decrease consecutively.
Approximately 1.0 sec. after the finish of the operation, the display returns to the on-air condition.
As for the volume level, at the status of radio (AM/FM1/FM2), AUX, and Bluetooth Audio, it is controlled respectively.
{As for "SOUND ADJUSTMENT" (TRE, BAS, BAL) described below, the radio, AUX, and Bluetooth Audio are set commonly.}

{In case that selected band is FM1 (sound level of 11)}

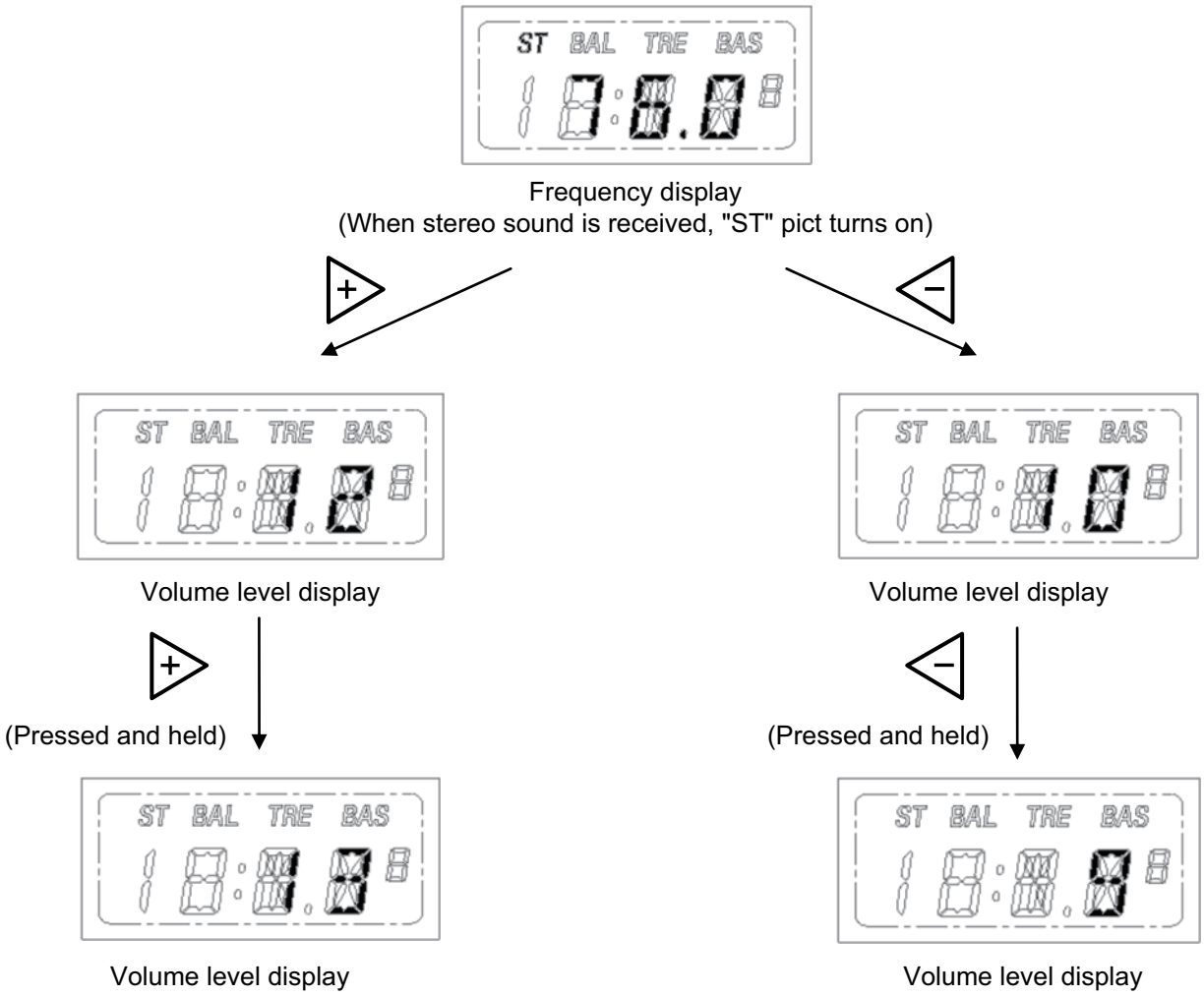

Copyright©2022 Kobelco Construction Machinery Co.,Ltd. All rights reserved. [S2LC00054ZE11] [0609CsCshWbYs]

2.9.10 SOUND ADJUSTMENT

SOUND ADJUSTMENT

With the radio component in the on-air (normal) condition, press [SOUND/PAIR] key to enter the sound adjustment. By pressing [SOUND/PAIR] key repeatedly, the adjustment item is switched through BAL→TRE→BAS.
With the radio component in the BAS condition, by pressing [SOUND/PAIR] key, the sound adjustment status is canceled and the display returns to the on-air condition.

(In case that selected band is FM1)

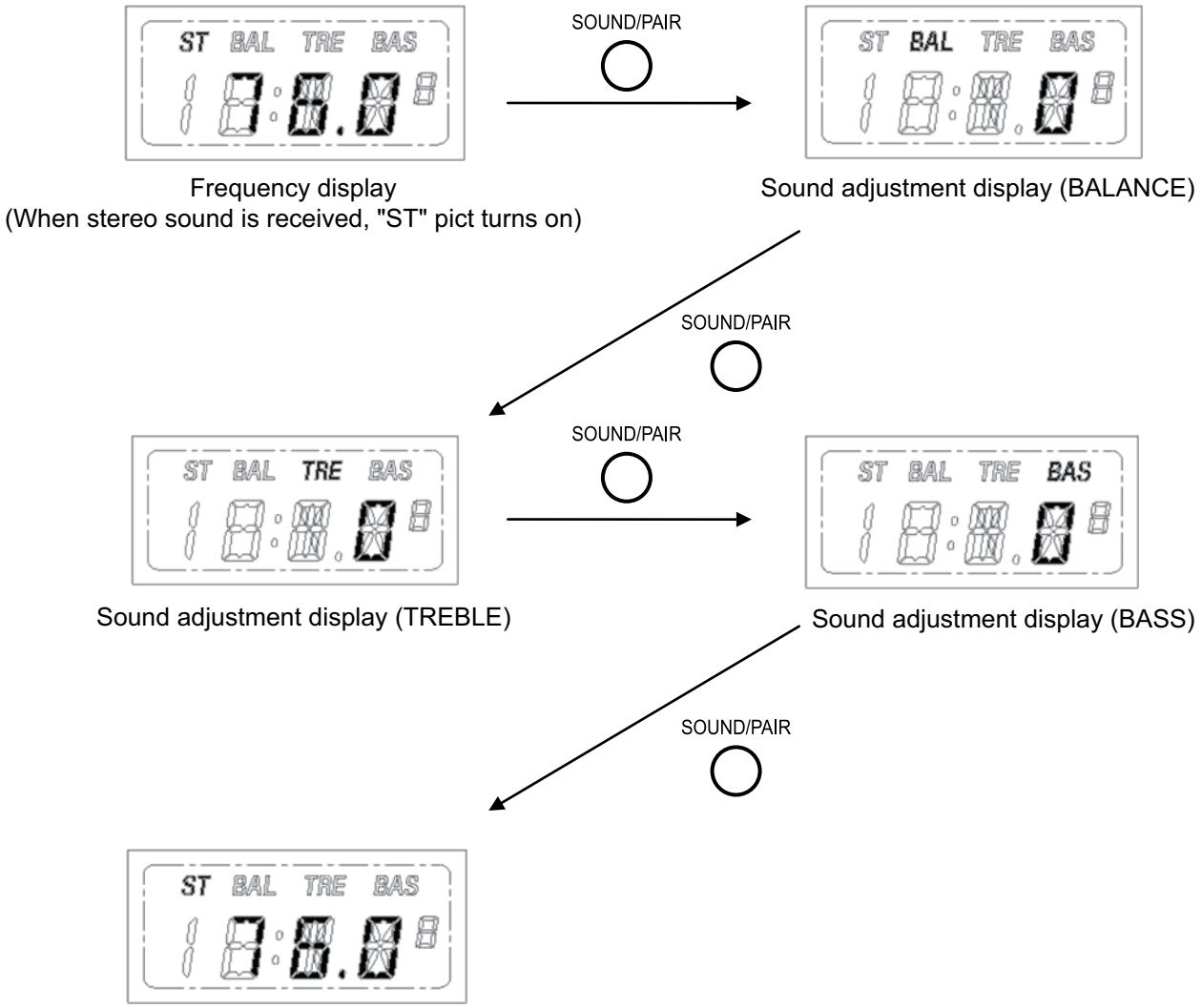

Copyright©2022 Kobelco Construction Machinery Co.,Ltd. All rights reserved. [S2LC00054ZE11] [0609CsCshWbYs]

SOUND ADJUSTMENT (BALANCE)

With the radio component in the sound adjustment (balance) condition, press [UP] key to increase the speaker output by 1 step towards the R output.
Press [DOWN] key to increase the speaker output by 1 step towards the L output.
The setting range is L7 to R7 regarding 0 as the center. (L7 - 0 - R7)

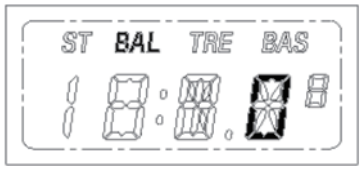

Sound adjustment display (BALANCE)

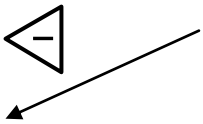

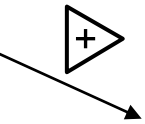

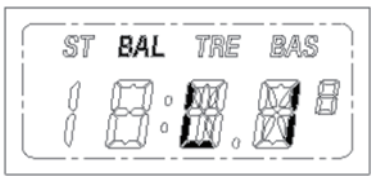

Sound adjustment display (BALANCE)

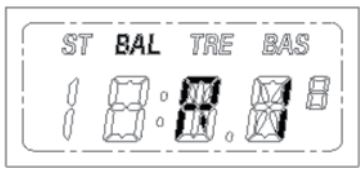

Sound adjustment display (BALANCE)

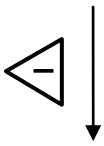



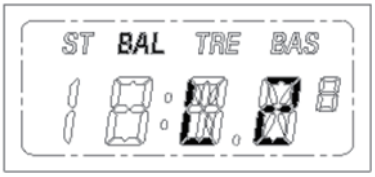

Sound adjustment display (BALANCE)

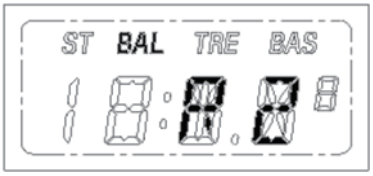

Sound adjustment display (BALANCE)

Copyright©2022 Kobelco Construction Machinery Co.,Ltd. All rights reserved. [S2LC00054ZE11] [0609CsCshWbYs]

SOUND ADJUSTMENT (TREBLE)

With the radio component in the sound adjustment (treble) condition, press [UP] key to increase the treble level by 1 step.
Press [DOWN] key to decrease the treble level by 1 step.
The setting range is -7 to +7 regarding 0 as the center. (-7 - 0 - +7)

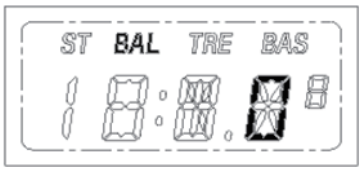

Sound adjustment display (TREBLE)

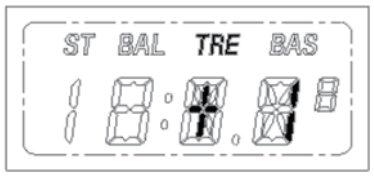

Sound adjustment display (TREBLE)

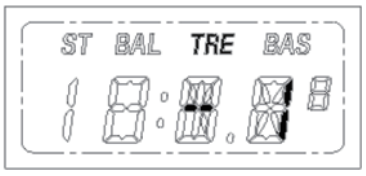

Sound adjustment display (TREBLE)

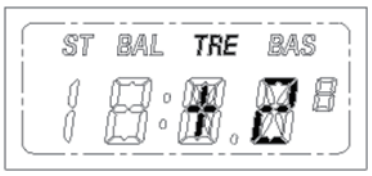

Sound adjustment display (TREBLE)

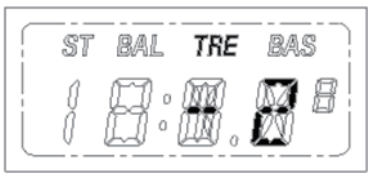

Sound adjustment display (TREBLE)

Copyright©2022 Kobelco Construction Machinery Co.,Ltd. All rights reserved. [S2LC00054ZE11] [0609CsCshWbYs]

SOUND ADJUSTMENT (BASS)

With the radio component in the sound adjustment (bass) condition, press [UP] key to increase the bass level by 1 step.
Press [DOWN] key to decrease the bass level by 1 step.
The setting range is -7 to +7 regarding 0 as the center. (-7 - 0 to - 7)

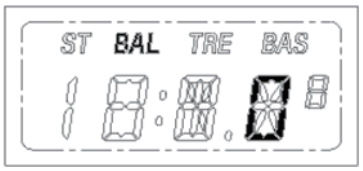

Sound adjustment display (BASS)

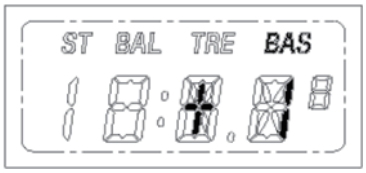

Sound adjustment display (BASS)

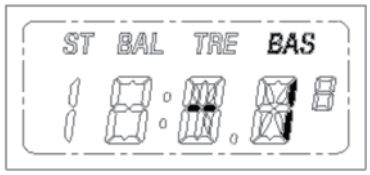

Sound adjustment display (BASS)

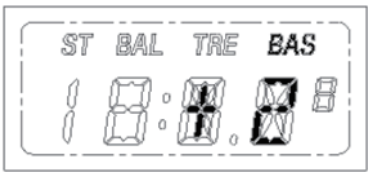

Sound adjustment display (BASS)

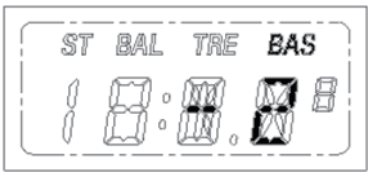

Sound adjustment display (BASS)

Copyright©2022 Kobelco Construction Machinery Co.,Ltd. All rights reserved. [S2LC00054ZE11] [0609CsCshWbYs]

2.9.11 CLOCK ADJUSTMENT

With the radio component in the clock display condition, press [DISP] key to enter the clock adjustment.
In the clock adjustment, by pressing [DISP] key, the adjustment target changes from time to minute (the adjustment target blinks). Then press [UP] or [DOWN] key to adjust time and minute respectively.
With the radio component in the minute adjustment condition, by pressing [DISP] key, the clock adjustment status is canceled.
(From this time, the second counting starts internally.)
* The clock display is 12 hours display.

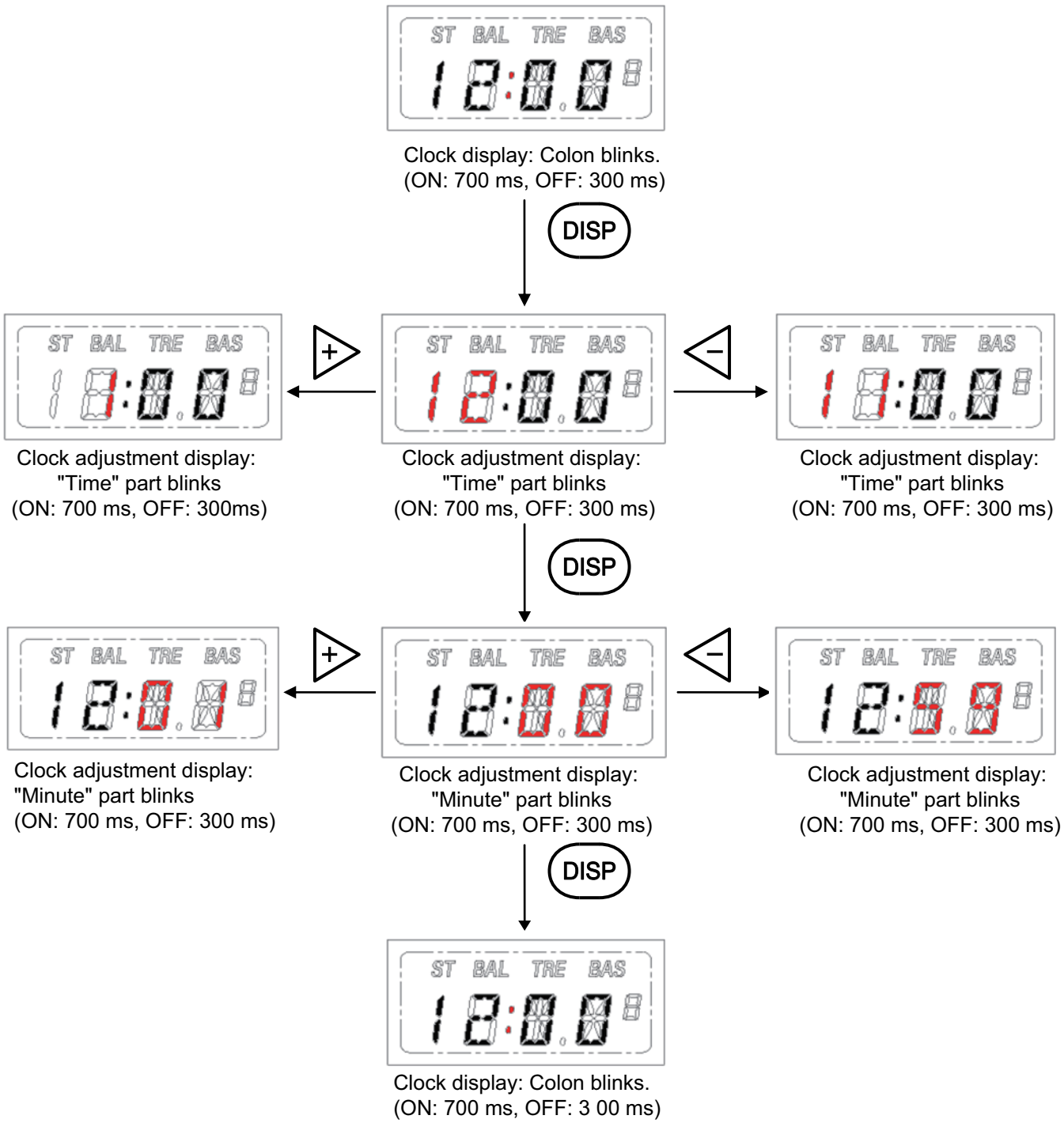

Copyright©2022 Kobelco Construction Machinery Co.,Ltd. All rights reserved. [S2LC00054ZE11] [0609CsCshWbYs]

2.10 AIR CONDITIONER

The air conditioner can adjust the temperature inside the cab and dehumidify the cab.
The air conditioner is located under the cover at the back of the operator's seat and sends out warm and cool air in the cab.

2.10.1 GRILLE (AIR OUTLET)

Select air stream in preferable direction by hand.

(A), (B), (C), and (D): Air Outlet

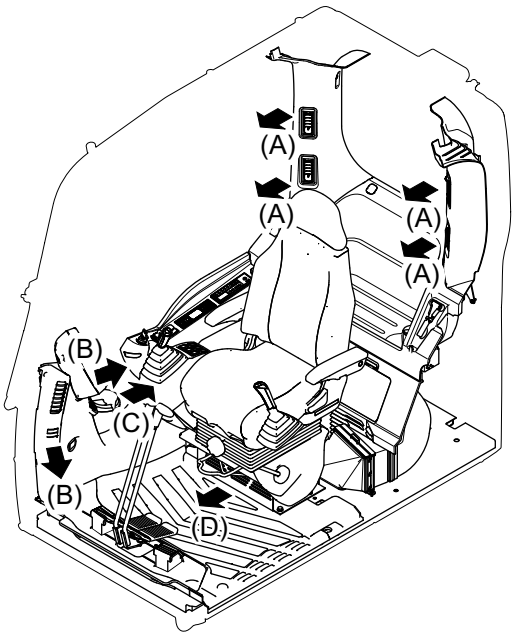

CAUTION

After replacing the parts, or charging or replacing refrigerant gas, break in the air conditioner.
When breaking in the air conditioner, be sure to set the engine speed to low speed.
Never start the air conditioner with the high engine speed. This might cause failure of the air conditioner.

Copyright©2022 Kobelco Construction Machinery Co.,Ltd. All rights reserved. [S2LC00054ZE11] [0609CsCshWbYs]

2.10.2 AIR CONDITIONER CONTROL PANEL

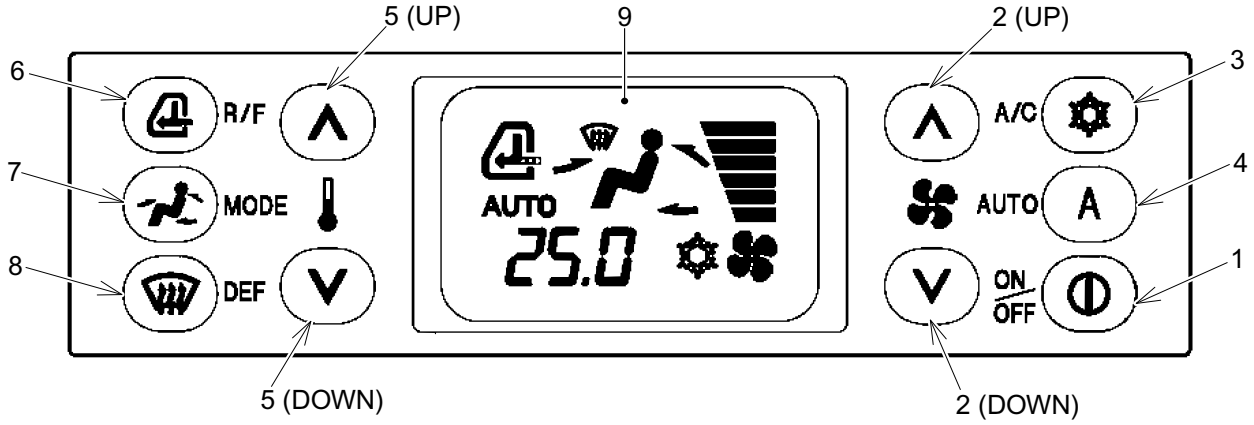

Item	Name	Item	Name	Item	Name
1	Main power switch	4	AUTO control switch	7	Air outlet mode selector switch
2	Fan speed selector switch	5	Temperature setting switch	8	Defroster switch
3	Air conditioner switch	6	Internal and external air selector switch	9	LCD display

Notice

- The LCD display on the center shows temperature, air outlet mode, compressor ON-OFF, AUTO, internal and external air, and blower air amount.
- Each switch, fan mark of the blower, and TEMP mark have the night light (green).
- Electronic sound is output as each switch is pressed (However, when its operation is active only. For example, when the fan speed is "LO" in manual operation, no electronic sound is output even if pressing the switch to "DOWN" the fan speed further).

Copyright©2022 Kobelco Construction Machinery Co.,Ltd. All rights reserved. [S2LC00054ZE11] [0609CsCshWbYs]

2.10.3 AIR CONDITIONER OPERATION PANEL

MAIN POWER SWITCH AND DISPLAY

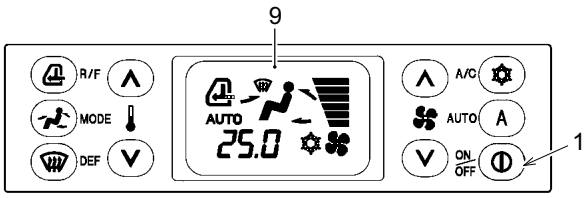

- LCD display (9) is on when the air conditioner is operating.
  The LCD is off when the air conditioner is not operating.
- Press main power switch (1), and all functions of air conditioner are ON or OFF. Every time you press this switch, the functions cycle between ON-OFF. When the power is ON, the air conditioner starts operating with the setting (If the setting was AUTO, it starts with AUTO, and is manual operation was selected, it starts with that selection) just before turning OFF.
- The air conditioner operation becomes OFF when the starter switch is turned OFF. But if the air conditioner is turned OFF with this switch, the air conditioner may not start with the previous operation status of control panel just before turning OFF, when the starter switch is turned ON.

FAN SPEED SELECTOR SWITCH AND DISPLAY

In the manual selection, the LCD fan speed display is like the following.

Fan speed	Lo (Min. Flow)	M1	M2	M3	M4	Hi (Max. Flow)
Display						

By pressing UP(2) or DOWN (2) of fan speed selector switch (2) manually, the AUTO control of fan speed is released, and "AUTO" display in LCD display (9) becomes OFF.

AIR CONDITIONER SWITCH AND DISPLAY



With the condition that the symbol of the right figure turns OFF on the LCD display, press air conditioner switch (3). Then the compressor turns ON and the symbol of the right figure turns ON on LCD display (9). When the air conditioner switch is pressed again, the compressor turns OFF and the symbol of the right figure turns OFF on LCD display (9).

AUTO CONTROL SWITCH AND DISPLAY

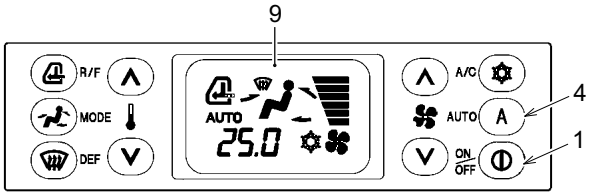

- "AUTO" on LCD display (9) turns ON only when both fan speed and air outlet control are "AUTO".
- When AUTO control switch (4) is pressed, the fan speed and the air outlet become under the AUTO control, and "AUTO" turns ON on LCD display (9).
- When main power switch (1) is OFF, turn the switch ON, and the air conditioner functions are also turned ON same as the main power switch. However, both fan speed and air outlet control become under the "AUTO" control.

Copyright©2022 Kobelco Construction Machinery Co.,Ltd. All rights reserved. [S2LC00054ZE11] [0609CsCshWbYs]

TEMPERATURE SETTING SWITCH AND DISPLAY

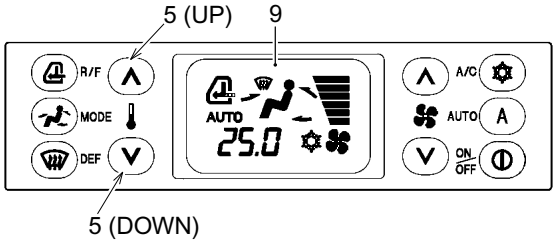

- The digital set temperature appears on LCD display (9).
  The set temperature range is 18 degrees C to 32 degrees C.
- When changing the set temperature, press "UP" and "DOWN" of temperature setting switch (9). The increment and decrement of UP (5) and DOWN (5) is 0.5 degrees C. When the switch is pressed and held down, the set temperature can decrease or increase continuously.
- The set temperature of 18 degrees C is the maximum cooling and that of 32 degrees C is the maximal heating control. And the both control do not operate by targeting the set temperature.
- The set temperature display can be switched between "Fahrenheit ←→ Celsius". While the fan is operating, press and hold "UP" and "DOWN" of temperature setting switch (9) together for 5 seconds to switch the display between "Fahrenheit ←→ Celsius". (No unit is displayed)

LCD DISPLAY

Celsius (degrees C): LO, 18.5 to 31.5, HI
Fahrenheit (degrees F): LO, 64F to 89F, HI

INTERNAL AND EXTERNAL AIR SELECTOR SWITCH AND DISPLAY

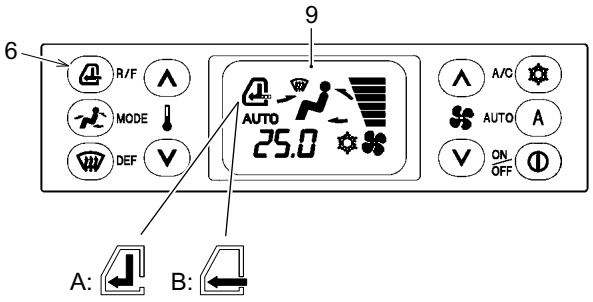

- The current inlet mode is displayed in LCD display (9).
- Each time internal and external air selector switch (6) is pressed, the mode is switched to air recirculation or fresh air intake.

A: Air recirculation

B: Fresh air intake

Copyright©2022 Kobelco Construction Machinery Co.,Ltd. All rights reserved. [S2LC00054ZE11] [0609CsCshWbYs]

AIR OUTLET MODE SELECTOR SWITCH AND DISPLAY

- The current air outlet mode position is displayed with arrow(s) on the LCD display.
- When air outlet mode selector switch (7) is pressed while "AUTO" is ON, the air outlet mode is fixed with the mode at that time and "AUTO" on the LCD display turns OFF, and the AUTO control of the air outlet mode is released.

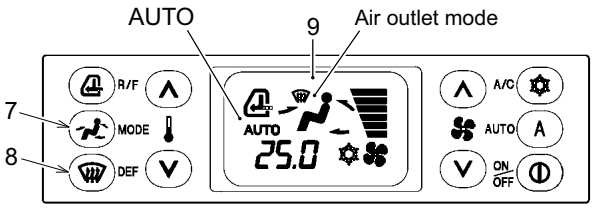

<Air outlet mode display>

Mode	1	2	3	4	5
Outlet mode	FACE	VENT	HIGH-LEVEL	F/D	DEF
	UP (Front side only)	UP	UP&DOWN	DOWN&WINDSHIELD	DEFROST
LCD display					

- When air outlet mode selector switch (7) is pressed in the manual control, it switches through Mode 1 → Mode 2 → Mode 3 → Mode 4 → Mode 1....
  For the defroster switching, press defroster switch (8).
- Air outlet mode under the AUTO control switches as shown in the figure.

<Air outlet mode under auto control>

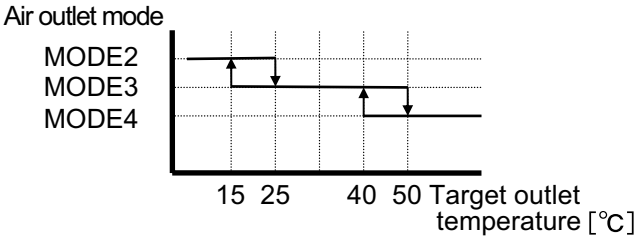

DEFROSTER SWITCH AND DISPLAY

- Press defroster switch (8), and the display A on LCD display (9) turns OFF, and the B mark is displayed.
- To go back to a mode other than the defroster, push air outlet mode selector switch (7), and the mode returns to the air outlet mode before the defroster switch was pressed.
- When defroster switch (8) is pressed while "AUTO" is ON, "AUTO" on LCD (9) turns OFF, and the AUTO control of the air outlet is released.

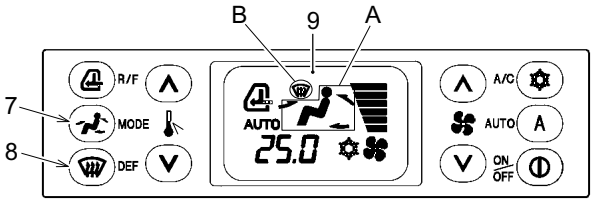

Copyright©2022 Kobelco Construction Machinery Co.,Ltd. All rights reserved. [S2LC00054ZE11] [0609CsCshWbYs]

2.10.4 HOW TO USE AIR CONDITIONER

Close the cab door and windows to get the best performance as an automatic air conditioner.

COOLING METHOD

⚠CAUTION

To avoid freezing of the evaporator, do not operate the air conditioner for a long time in the COOL-MAX set temperature with the LO airflow.
If it is frozen and cool air does not flow any longer, turn air conditioner switch (3) off, set the temperature high, operate the air conditioner with the maximum airflow "HI", and then turn air conditioner switch (3) "ON".

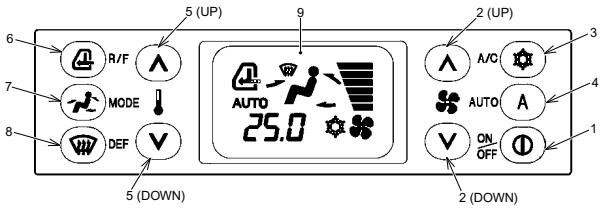

1. Press main power switch (1).
2. Press fan speed selector switch (2), and select "HI".
3. Press temperature adjustment switch (5), and set your desired temperature.
4. Press air conditioner switch (3).
5. Press internal and external air selector switch (6), and select the air recirculation.
6. Press air outlet mode selector switch (7), and select the vent air outlet (Mode 2).
7. When the temperature inside the cab becomes low, adjust to the temperature and the fan speed to desired levels.
   Press auto switch (4) to automatically control a temperature and mode.

HEATING METHOD

⚠CAUTION

The engine coolant is used for heating, and it is possible to heat the air when the temperature of the coolant is high.

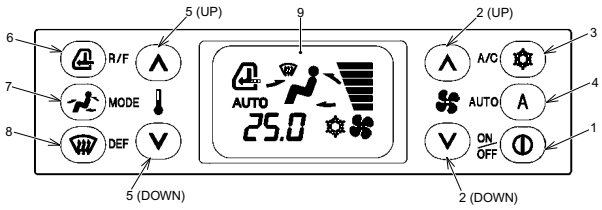

1. Press main power switch (1).
2. Press fan speed selector switch (2), and select "HI".
3. Press temperature adjustment switch (5), and set your desired temperature.
4. Press internal and external air selector switch (6), and select the fresh air intake.
5. Press air outlet mode selector switch (7), and select the down air outlet (Mode 4).
6. When the temperature inside the cab becomes high, adjust to the temperature and the fan speed to desired levels.
   Press auto switch (4) to automatically control a temperature and mode.

Copyright©2022 Kobelco Construction Machinery Co.,Ltd. All rights reserved. [S2LC00054ZE11] [0609CsCshWbYs]

METHOD OF HEATING WITH DEHUMIDIFICATION AND DEMISTING

CAUTION

When the outdoor temperature is 0 degrees C or lower, the air conditioner (compressor) may not work.

1. Press main power switch (1).
2. Press fan speed selector switch (2), and select your desired fan speed.
3. Press temperature adjustment switch (5), and set your desired temperature.

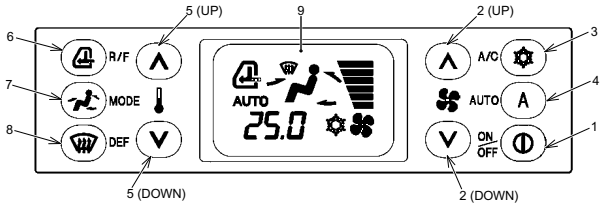

4. Press internal and external air selector switch (6), and select the fresh air intake.
5. Press air conditioner switch (3), and operate the air conditioner (compressor).

2

Copyright©2022 Kobelco Construction Machinery Co.,Ltd. All rights reserved. [S2LC00054ZE11] [0609CsCshWbYs]

2.10.5 SELF-DIAGNOSIS FUNCTION IN DISPLAY MONITOR

If there are problems on the input circuit of the driving line in the motor actuator, they can be checked on the panel display.

<Disconnection detection of the motor actuator and the motor lock detection display>

Error Location	Error Display	
Air mix	・Displays "HLE" on temperature display segment	
Air outlet mode	・Flashes human indication	
Switching internal and external air	・Flashes internal and external air symbols	

If there are problems on the input circuit of the evaporator and recirculation air sensors, they can be checked on the panel display.

<Disconnection detection display of evaporator and recirculation air sensors

Error Location	Error Display	
Evaporator sensor	・Displays "E" on the temperature display, first decimal point	18 degrees C : LO.E 25 degrees C : 25.E 32 degrees C : HO.E
Recirculation air sensor	・Displays "H L" on the temperature display and "0 to 9" on the first decimal point	HL. 0 to HL. 9

Error detection of each sensor from monitor mode (showing failure control of the control panel)

- To start the monitor display, press and hold the internal and external air selector switch and the main power switch simultaneously for one second or more while the air conditioner is running. Then the display switches to the monitor mode. Follow the same procedure to exit the mode.
- The normal status, disconnection, and short circuit of the recirculation air sensor and evaporator sensor are shown as segment display.

<7seg display for monitor>

Sensor Name	7seg Display for Monitor
Recirculation air sensor	0
Evaporator sensor	1
Solar radiation sensor	2

<Error display contents>

Sensor Name	Short Display	Disconnection Display
Recirculation air sensor	F6H^{0}	0CH^{0}
Evaporator sensor	F6H^{1}	0CH^{1}

<Example:
7seg display for monitor location>

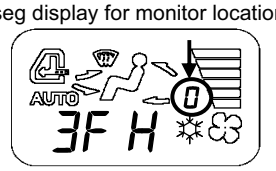

<Example:
Digits display location>

2nd digit: F



3rd digit: 3

<Example: Normal>

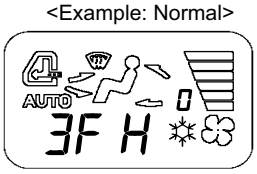

<List table of 3rd digit segment>

3rd digit segment display \ 2nd digit segment display	0	1	2	3	4	5	6	7	8	9	A	B	C	D	E	F
0	Recirculation air sensor disconnection "0CH^{0}" display															
1	Evaporator sensor disconnection "0CH^{1}" display															
2	Each sensor is normal															
3																
4																
5																
6																
7																
8																
9																
A																
B																
C																
D																
E																
F														Recirculation air sensor short "F6H^{0}" Display		
														Evaporator sensor short "F6H^{1}" Display		

Copyright©2022 Kobelco Construction Machinery Co.,Ltd. All rights reserved. [S2LC00054ZE11] [0609CsCshWbYs]

2.10.6 HANDLING AT IN-SEASON/OFF-SEASON

IN-SEASON

To use the air conditioner for a long time comfortably, contact your KOBELCO authorized dealer for inspection and maintenance of the air conditioner at the beginning of in-season of cooling.

OFF-SEASON

During off-season, operate the air conditioner at least once a week for several minutes.
The oil shortage at each part of the compressor will be prevented by operating the air conditioner and it will always be kept in the best condition.

Copyright©2022 Kobelco Construction Machinery Co.,Ltd. All rights reserved. [S2LC00054ZE11] [0609CsCshWbYs]

2.11 HANDLING OF SEAT BELT

WARNING INSTALLATION OF SEAT BELT

- Be sure to fasten your seat belt during operation. If not followed, it can result in serious accidents or death caused by being heavily hit inside the cab or thrown out of the cab when the machine tips/rolls over.
- Check the mounting bolts installed to the seat for looseness and retighten the bolts if required.
- Change the seat belt every three years, even if there is no abnormality in the appearance. The manufacturing date is woven into the back side of the belt.

2.11.1 HOW TO FASTEN SEAT BELT

1. Check that the seat belt is not twisted, and insert it into buckle until it clicks.
2. Adjust the seat belt to remove excess slack.

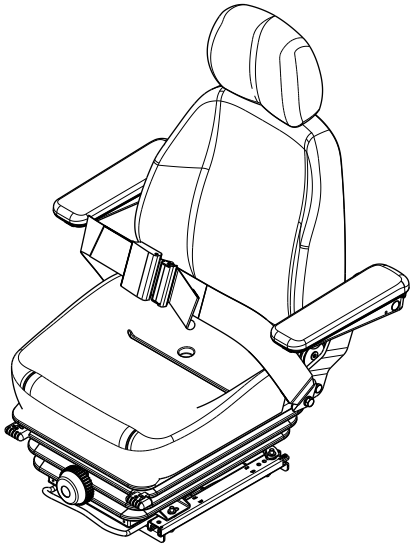

2.11.2 HOW TO UNFASTEN SEAT BELT

- To unfasten the seat belt, pull "a" of the buckle.

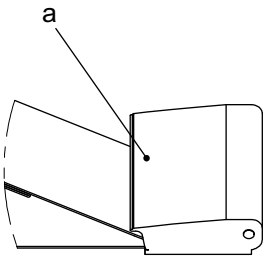

Copyright©2022 Kobelco Construction Machinery Co.,Ltd. All rights reserved. [S2LC00054ZE11] [0609CsCshWbYs]

2.12 HANDLING OF OPERATOR'S SEAT

The position of operator's seat can be adjusted. Adjust the seat to the position at which you can operate the control levers and pedals easily.

⚠CAUTION

When adjusting the operator's seat, pay attention to hands in order not to be caught between the handle and seat stand.

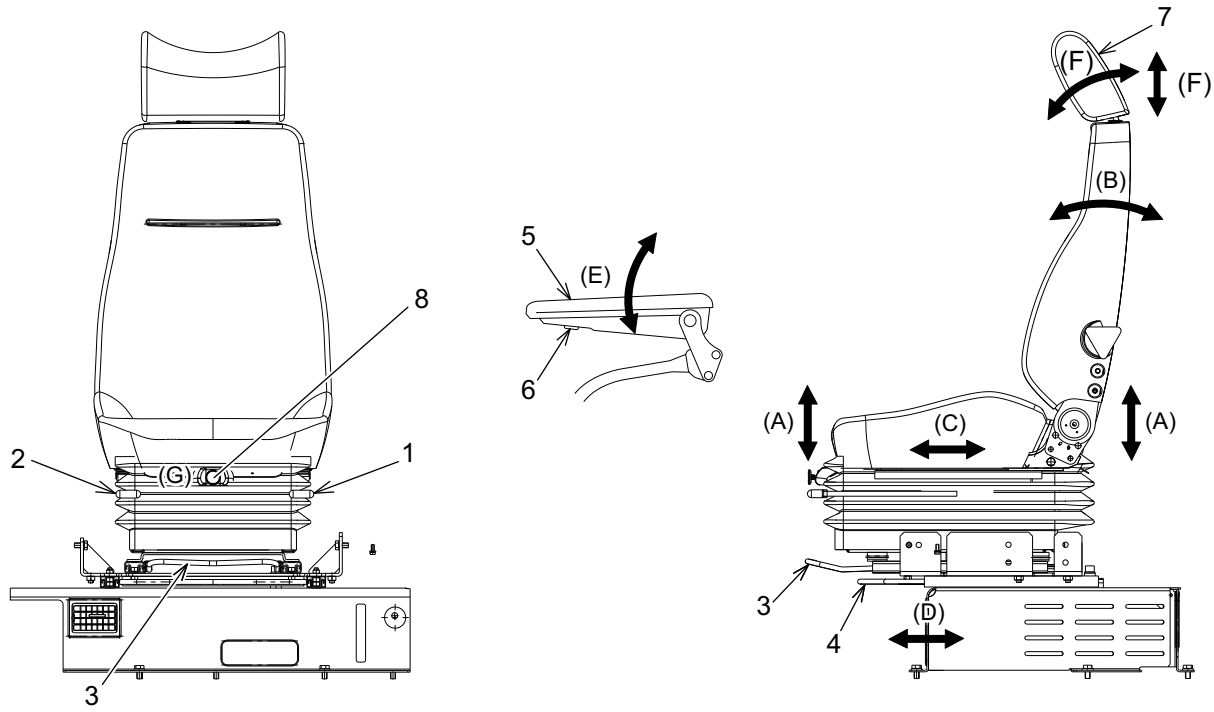

2.12.1 HEIGHT AND TILT ADJUSTMENT

(A) The height and angle of operator's seat can be adjusted.

- Pull lever (1) up to tilt the front of the seat up/down. (5 levels tilting)
- Pull lever (1) down to tilt the rear of the seat up/down. (5 levels tilting)
- The height of the seat is adjusted by tilting the front and rear of the seat alternatively.

2.12.2 RECLINING ADJUSTMENT

(B) The reclining angle can be adjusted.

- Pull lever (2) up, and recline the backrest to your desired angle. After adjustment, release the lever to fix the angle.

2.12.3 FRONT/REAR SEAT ADJUSTMENT

(C) The position of operator's seat can be adjusted back and forth.

- To slide the seat back and forth, pull handle (3) up.
  After adjusting the seat to your desired position, release the handle and check that the seat is locked securely.
  (Adjustable length: 160 mm)

Copyright©2022 Kobelco Construction Machinery Co.,Ltd. All rights reserved. [S2LC00054ZE11] [0609CsCshWbYs]

2.12.4 FORWARD AND REARWARD ADJUSTMENT OF CONTROL STAND

(D) The control stand can be adjusted forward and rearward.

- Pull up lever (4) and move the operator’s seat and then forward and rearward adjustment of the whole control stand becomes possible.

2.12.5 ARM REST ADJUSTMENT

(E) The arm rest can be lifted up, and its angle can be adjusted.

- Arm rest (5) can be lifted up backward.
- Turn control dial (6) at the bottom of arm rest (5) by hand to fine adjust the angle of the arm rest in regular position up/down.

2.12.6 HEAD REST ADJUSTMENT

(F) The head rest can be moved up, down, back, and forth.

- To adjust the head rest (7) up and down, hold the head rest with both hands, and move it up or down slowly.
- To adjust the head rest (7) back and forth, hold the head rest with both hands, and move it back and forth to your desired position.

2.12.7 SUSPENSION ADJUSTMENT

(G) The suspension can be adjusted.

- Adjustment knob (8) of the suspension is located at the front of the seat. You can adjust the suspension by pulling /pushing this knob to your desired status of the suspension in accordance with your weight. This is possible when the starter switch is "ON".

Copyright©2022 Kobelco Construction Machinery Co.,Ltd. All rights reserved. [S2LC00054ZE11] [0609CsCshWbYs]

2.13 HANDLING PARTS INSIDE CAB

WARNING LEAVING OPERATOR'S SEAT

Do not leave the cab with the engine running.
When necessary to leave the operator's seat, be sure to lock the control lock lever and then stop the engine.
If the control lever is unexpectedly touched without the control lock lever locked, it may cause severe accident resulting in severe injury.

2.13.1 CAB DOOR LOCK

CAUTION

In operation, lock the door securely either open side or close side. If not locked, the door may open or close unexpectedly and this may cause danger and failure of the machine.

This is used to fix the door in the condition where the door is open.

- Push the door against catch (1) and door is fixed.
- To close the door, push down lever (2) on the left side of the operator's seat to release the catch.
- When necessary to fix the door, fix the door to the catch securely.

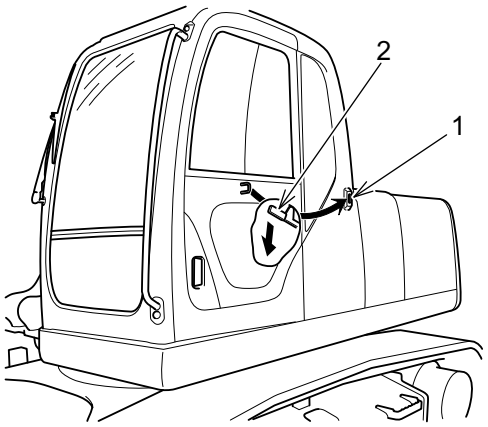

2.13.2 OPENING DOOR FROM INSIDE OF CAB

- To open the door from the inside of the cab, move lever (1) to the direction of the arrow.

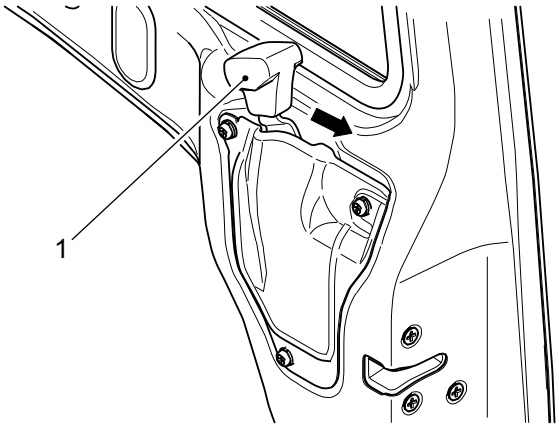

Copyright©2022 Kobelco Construction Machinery Co.,Ltd. All rights reserved. [S2LC00054ZE11] [0609CsCshWbYs]

2.13.3 OPENING/CLOSING FRONT WINDOW (UPPER)

WARNING OPENING/CLOSING FRONT WINDOW (UPPER)

- Opening/closing the front window with the machine in a level position and lock the front window securely. If the lock is released in the forward tilting position of machine there is a possibility of falling of the front window.
- When closing the front window, the closing speed increases due to the weight of front window. Hold and close it by both hands securely.
- When opening/closing the front window in, pull up the control lock lever to the "LOCKED" position and stop the engine.

CAUTION

To prevent your hand from being caught between the windows, open and close the front window slowly. It is dangerous to work with the front window not or incompletely locked. Confirm that the front window is surely locked.

1. Move the machine to a level and firm place.
2. Put the bucket on the ground.
3. Stop the engine and move the control lock lever to the "LOCKED" position.

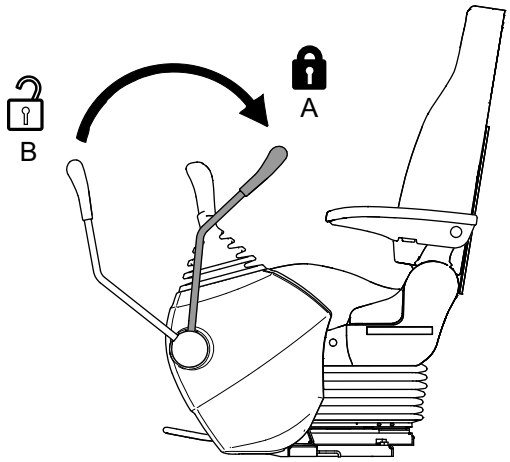

4. Push lock lever (1) on the center of the front window (upper) right to release the lock.

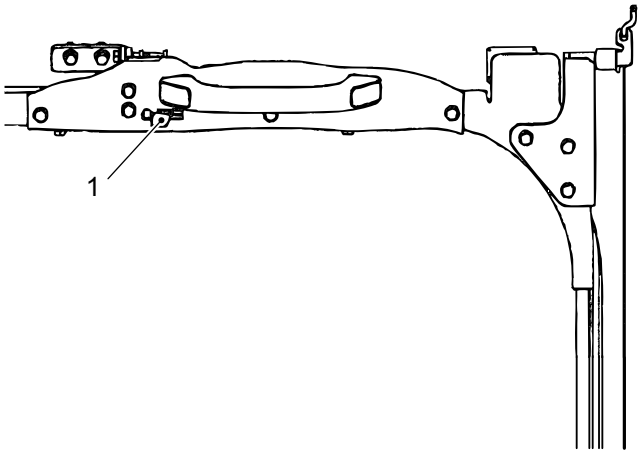

Copyright©2022 Kobelco Construction Machinery Co.,Ltd. All rights reserved. [S2LC00054ZE11] [0609CsCshWbYs]

5. Hold and lift up the handles(2) on the upper and lower part of the front window (upper), and move the front window (upper) fully toward the back of the ceiling to automatically set it to the locked condition; however, check it is locked securely.
   When closing front window
   1. Hold handles (2) at the upper and lower parts of the front window (upper) and push lock lever (1) right to release the lock.
   2. When the front window (upper) is returned to the original position, it is locked automatically. However, check that the window is securely locked.

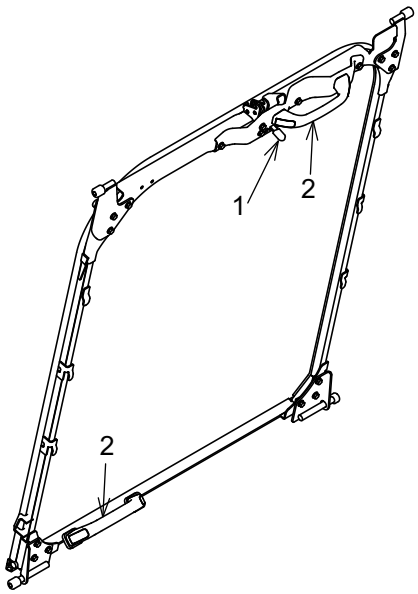

2.13.4 RETRACTING FRONT WINDOW (LOWER)

1. After retracting the front window (upper) in the ceiling, hold the front window (lower) by hands and remove it from the window frame.
   The removed front window (lower) should be stored in holder (1) on the left back side of the cab for secure storage.
2. Insert the glass into right and left holders (1), and fix the glass with lock (2) on the upper window frame.

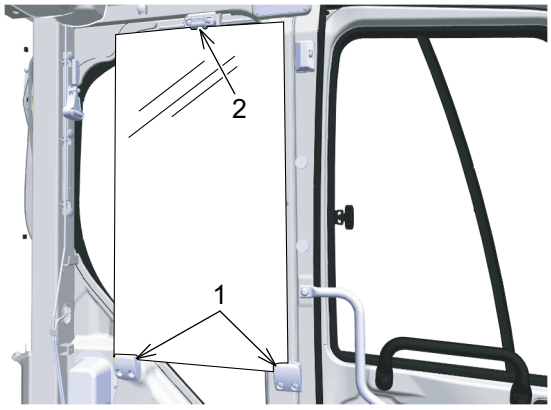

2.13.5 CAB ROOM LAMP

Operate the switch in accordance with the purpose.

- Turn the switch "ON" to turn on the lamp.
- The lamp does not turn on when the switch is on the "OFF" side.

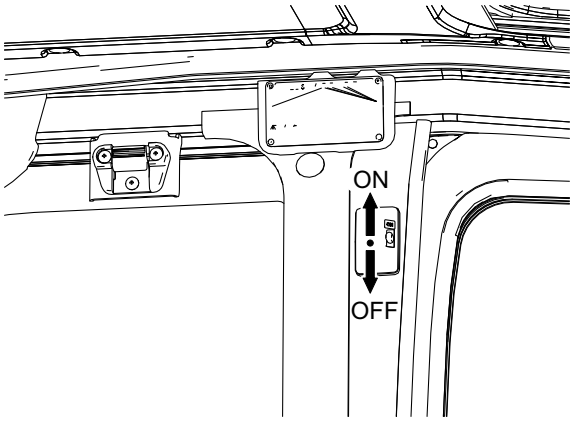

Copyright©2022 Kobelco Construction Machinery Co.,Ltd. All rights reserved. [S2LC00054ZE11] [0609CsCshWbYs]

2.14 EMERGENCY ESCAPE FROM OPERATOR'S STATION

If it is impossible to open the cab door in an emergency, escape from the cab by the following way.

1. Open the front window and escape through the front window.

Notice

For how to open the front window, see "OPENING/CLOSING FRONT WINDOW" in Chapter 2.

2. If the front window cannot be opened, break the front or rear window glass by using hammer for emergency exit (1) placed on the right rear of the cab.

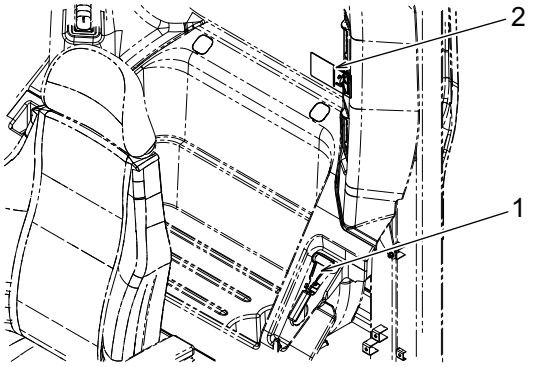

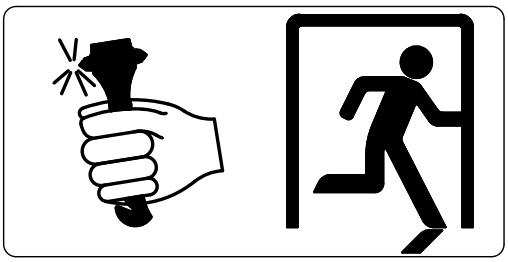

⚠CAUTION

Pay attention to the broken pieces so as not to be injured when breaking the window glass.

Notice

Label (2) indicating the emergency exit are affixed on the rear window.

Copyright©2022 Kobelco Construction Machinery Co.,Ltd. All rights reserved. [S2LC00054ZE11] [0609CsCshWbYs]

2.15 OTHER ACCESSORIES

2.15.1 TOOL BOX

Use the tool box for storing tools and fixtures. The storage place is on the right front of the machine.
Use the starter key to release the lock on the door, and hold it with the stay.
After using tools, remove the stay, close the cover, and lock it with the starter key.

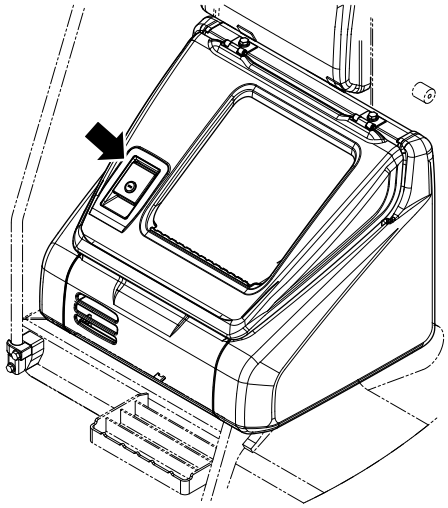

2.15.2 GREASE GUN HOLDER

This is on the right front of the machine.
When the gun is not used, put it on this holder.

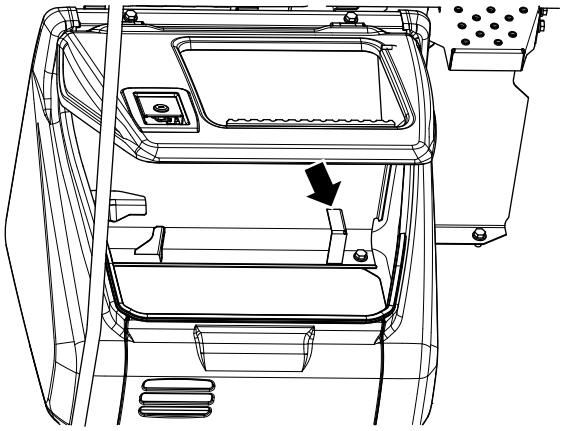

2.15.3 CUP HOLDER

This is located on the right inside the cab.
Store plastic bottles, etc.

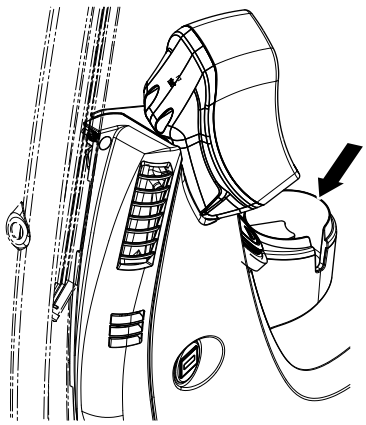

Copyright©2022 Kobelco Construction Machinery Co.,Ltd. All rights reserved. [S2LC00054ZE11] [0609CsCshWbYs]

2.15.4 GUARD/SIDE DOOR (WITH LOCK)

⚠CAUTION

Be sure to stop the engine before opening the engine hood, battery cover, and side cover, etc.

The engine hood, fuel inlet, right and left side doors, and cab door covers are provided with the lock mechanism. To open/close them, use the starter key. When using the starter key, fully insert it and then turn it. If it is not fully inserted, it may be broken.

HOW TO UNLOCK AND OPEN GUARD AND SIDE DOOR

1. Insert the starter key into the keyway.

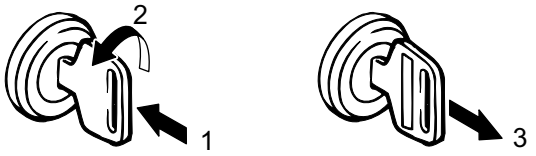

2. Turn the starter key counterclockwise and pull the door handle to open the door.
3. If the door is provided with a stay, support the door securely using the stay.

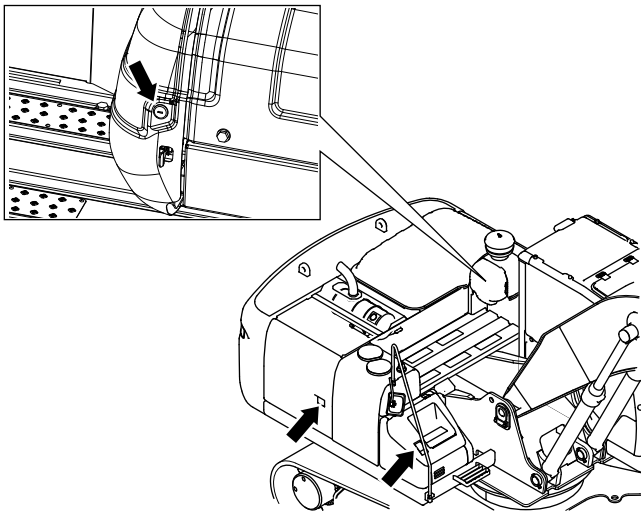

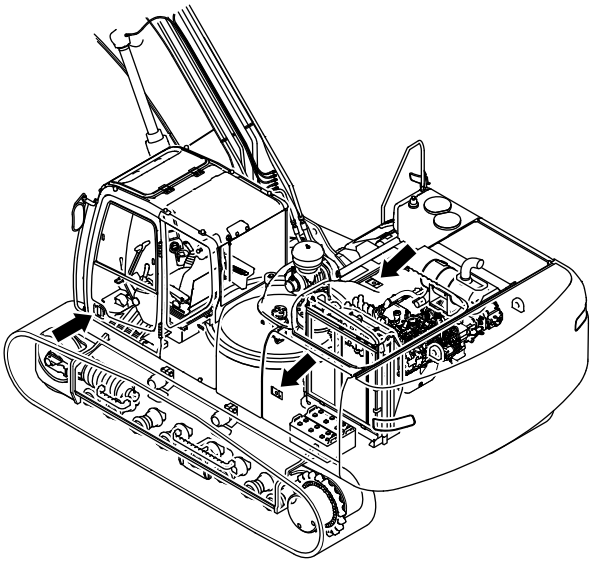

Copyright©2022 Kobelco Construction Machinery Co.,Ltd. All rights reserved. [S2LC00054ZE11] [0609CsCshWbYs]

HOW TO LOCK GUARD AND SIDE DOOR

1. If the lock lever mechanism is provided, return the lock lever to the original position.
2. Close the door.
3. Turn the starter key clockwise and remove it.

Copyright©2022 Kobelco Construction Machinery Co.,Ltd. All rights reserved. [S2LC00054ZE11] [0609CsCshWbYs]

2.16 BATTERY POWER-OFF SWITCH

CAUTION

When turning the battery power-off switch to the "O (OFF)" position, turn the starter switch to the OFF position and wait 5 minute or more. And then operate the battery power-off switch.
If the battery power is turned off immediately after stopping the engine, it may cause damage to the exhaust gas cleaning device.

Notice

- Do not turn on the starter switch within one minute after turning the battery power-off switch to the "I (ON)" position.
- When setting the switch to the OFF position, all electrical circuits are shut down, and the preset memory and clock memory of the radio are cleared.

The battery power-off switch shuts down the battery circuit.
The switch is located on the right of the opened left side door. It is usually set to the "I (ON)" position.
ON(I): Turn key (1) right to connect the electrical circuit.
OFF(O): Turn key (1) left to shut down the electrical circuit.

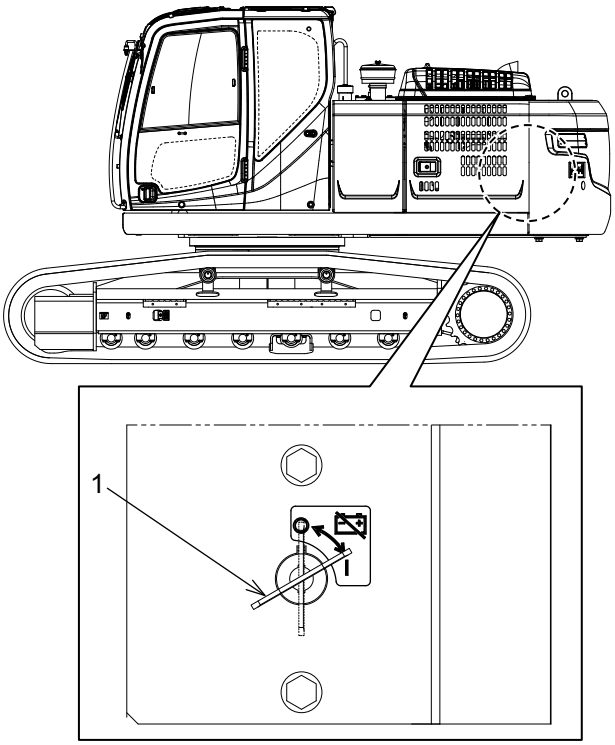

Notice

Set the battery power-off switch to "OFF" for the following purposes:

To stop operation of the machine for a long period (one month or longer)

Shut down the power circuit to prevent battery discharge, short circuit, or electric leakage.

To perform maintenance of the electrical system or electric welding

Shut down the power circuit to prevent damage of electrical components, fire and so on.

Copyright©2022 Kobelco Construction Machinery Co.,Ltd. All rights reserved. [S2LC00054ZE11] [0609CsCshWbYs]

3. MACHINE OPERATION

Copyright©2022 Kobelco Construction Machinery Co.,Ltd. All rights reserved. [S2LC00054ZE11] [0609CsCshWbYs]

Copyright©2022 Kobelco Construction Machinery Co.,Ltd. All rights reserved. [S2LC00054ZE11] [0609CsCshWbYs]

3.1 EVERYDAY CHECK-UP

Before starting the engine, walk around the machine to check for any loose nuts and bolts, any oil, fuel or coolant leakage, and the condition of the attachment/equipment, body structure, and hydraulic system.
Check for any looseness in the electrical wiring and for any accumulated material (leaves, dirt, etc.).

WARNING MACHINE FIRE PREVENTION

The deposit of flammable, fuel leakage and oil leakage in heated area around the engine, muffler and battery may cause fire of machine. Check the area sufficiently, and if the abnormality is found, repair it or contact your KOBELCO authorized dealer.

- Check the engine for any oil, fuel or coolant leakage. Repair as required.
- Check the area around the engine and radiator for any accumulated material and remove as required.
- Check the hydraulic devices, hydraulic oil tank, hoses and joints for oil leakage, and repair as required.
- Check the travel system, such as the crawler, front idlers and sprockets, for any damage or wear, and the bolts for looseness, and the rollers for oil leakage, and repair as required.
- Check the attachment/equipment, body structure, and cylinders for any cracking, damage or looseness, and repair as required.
- Check the doors, covers, steps and handrails for damage, and the bolts for looseness. Repair any damages and tighten loose bolts.
- Check the gauge cluster for damage and replace it as required.
- Check the rearview mirrors for abnormality and replace it with a new one when it is broken. Clean the surface of the mirror and adjust the angle so that the operator can see the rear from the operator's seat.
- Check the seat belts and the mounting hardware for the abnormality and if any damage is found, replace it with a new one.

Copyright©2022 Kobelco Construction Machinery Co.,Ltd. All rights reserved. [S2LC00054ZE11] [0609CsCshWbYs]

3.2 CHECK BEFORE STARTING ENGINE

The following checkup should be performed once before the first engine startup in a day.

3.2.1 CHECKING COOLANT LEVEL AND REFILLING

WARNING HANDLING OF RADIATOR

- Do not open the radiator cap if not required. Check the coolant of reserve tank (1) when the engine is cooled down.
- After the engine stops, the coolant is hot and the high pressure is accumulated in the radiator. Removing the radiator cap under this condition may cause burns. After the coolant cools down, turn the cap slowly to release the pressure.
- If the water level in the reserve tank drops frequently, immediately contact your KOBELCO authorized dealer.

CAUTION

The coolant level detecting switch is installed on the upper part of the radiator upper tank.
If the warning is displayed on the multi-display when the engine is running or when the engine switch is turned ON, loosen the radiator cap and pour coolant to the neck of the radiator cap. Then contact your KOBELCO authorized dealer.

1. Use the starter key to open the side door on the left side of the machine and hold it with the stay.
2. Check that the coolant level falls within the range of FULL (upper limit)-LOW (lower limit) of reserve tank (1). If the water level is low, remove the cap of filler port (2) of the reserve tank and pour coolant water to the FULL level.
   If the reserve tank is empty, check it for water leaks and check the water level in the radiator. If the water level is low, fill the radiator with coolant and then fill the reserve tank with coolant. Then immediately contact your KOBELCO authorized dealer.
3. After supply, tighten the cap securely.
4. Release the support stay and close the side door.

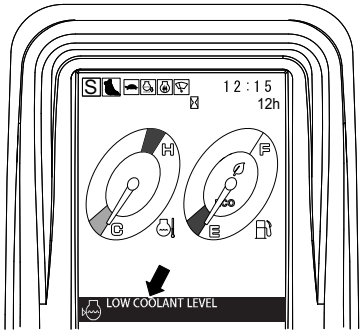

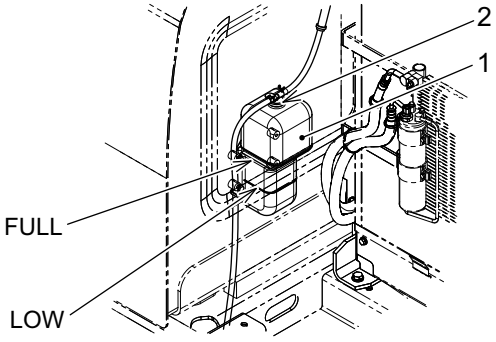

Copyright©2022 Kobelco Construction Machinery Co.,Ltd. All rights reserved. [S2LC00054ZE11] [0609CsCshWbYs]

3.2.2 CHECKING ENGINE OIL LEVEL OF ENGINE OIL PAN AND REFILLING

WARNING TEMPERATURE AFTER STOPPING ENGINE

Immediately after the engine is stopped, there is a possibility of getting burn with heated parts and oil. Start working after the temperature goes down.

Notice

- Make sure the machine is in a level and firm condition when checking the engine oil level.
- Be sure to check the engine oil level before starting the engine.
- When checking the engine oil level after operation, wait approximately 30 minutes from engine stop before checking it.

1. Open the engine hood with the starter key and hold it with the stay.
2. Pull out oil level gauge (1) and wipe off the oil with a waste cloth.
3. Insert oil level gauge (1) completely once again and pull it out.

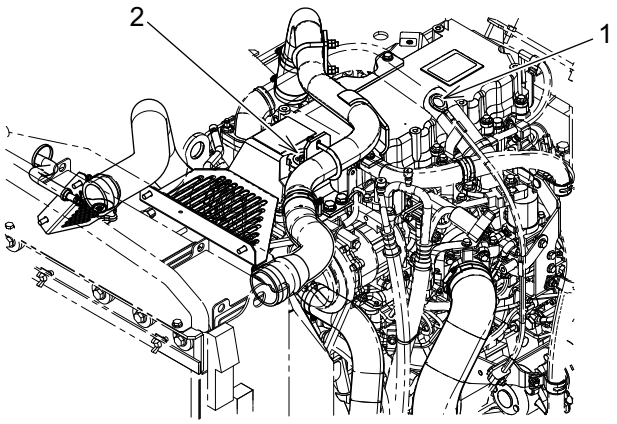

4. When oil level gauge (1) indicates the oil level between "H" (upper limit) and "L" (lower limit), it is proper. When the oil level does not reach "L" level, refill the engine oil from oil filler cap (2).
   If the oil is significantly contaminated or deteriorated, change it ahead of the periodic replacement interval. For engine oils to use, see "LUBRICANT, FUEL & COOLANT SPECIFICATIONS" in Chapter 4.
5. When the oil level is above the "H" level, loosen drain cock (4) to drain the excess engine oil and check the oil level once again.
6. Check that the oil level is proper and insert level gauge (1) securely.
7. Remove the support stay and close the engine hood.

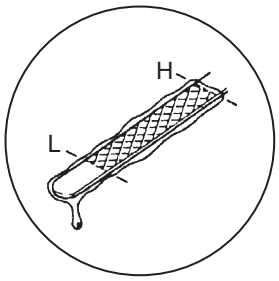

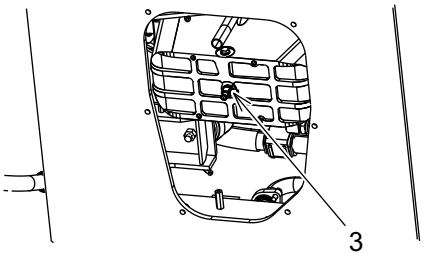

Copyright©2022 Kobelco Construction Machinery Co.,Ltd. All rights reserved. [S2LC00054ZE11] [0609CsCshWbYs]

3.2.3 CHECKING FUEL LEVEL AND REFUELING

WARNING REFUELING

- Never use the oil other than diesel fuel as fuel. Check the fuel type again before refueling.
- Be sure to stop the engine before refueling.
- Do not overflow fuel while refueling. Wipe off spilled fuel completely.

CAUTION

When getting on and off the machine, use the steps and handrails to prevent yourself from falling down or off from the machine.

Notice

- Be careful not to refuel the tank to a level more than necessary (to the top end of tank). There is a possibility of overflowing because the fuel expands as the outside air temperature rises.
- Be sure to use diesel fuel as fuel, which meets the standard of each country. To achieve a good fuel efficiency and exhaust gas property, the engine of this machine uses the electronically controlled fuel injector.
  Because this device requires high parts precision and high lubricating ability, when low viscosity fuel with low lubricating ability is used, the durability may decrease significantly.

1. Use the gauge cluster to check the fuel level.
   After turning the starter switch ON, the fuel level meter is displayed. When the fuel level is low, the pointer points E.
2. Refuel only after stopping the engine.
3. When refueling, climb up from the right front side of the machine and stand on the step above the control valve.
4. Remove rubber cover (2), if equipped, from the filler port and turn filler cap (1) to open it.
5. Refuel the machine with strainer (3) attached to the filler port.
   When dirt is adhered on strainer (3), take out strainer (3), wash it with light oil or clean it by air blowing, and then attach it to the filler port again.
   Fuel tank capacity: 320L(84.5Gal)

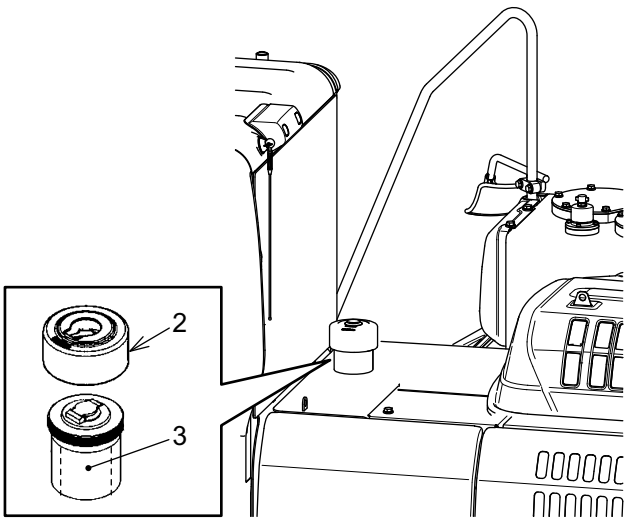

6. After refueling, tighten filler cap (1) securely. Attach rubber cover (2) according to the orientation of the cap.

Copyright©2022 Kobelco Construction Machinery Co.,Ltd. All rights reserved. [S2LC00054ZE11] [0609CsCshWbYs]

3.2.4 DRAINING FUEL PRE-FILTER

The fuel pre-filter is a device which separates water mixed in fuel.
When water is accumulated in the fuel pre-filter, drain the water.

1. Use the starter key to open the side door on the right side of the machine and hold it with the stay.
2. Place a drain oil container under drain hose (2).
3. Raise cock (5) to "Close" position (A).
4. Loosen drain valve (3) and air bleeder plug (4) to drain water accumulated in fuel filter (1) into the container.
5. After draining the water, tighten drain valve (3) and air bleeder plug (4) securely.
   Check the water drained to the container. If that is contaminated significantly, clean the element and the inside of the case.
6. Lower cock (5) to "Open" position (B).
7. Remove the support stay and close the side door.

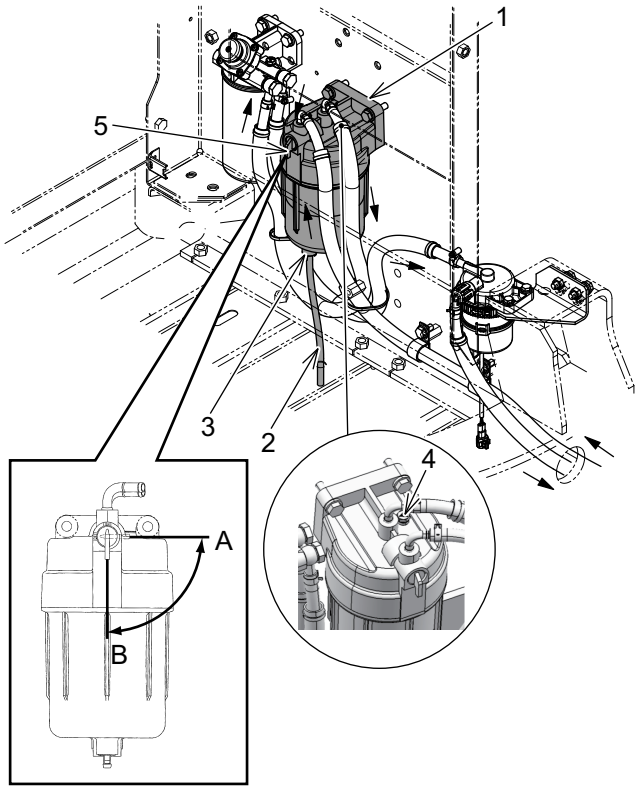

Copyright©2022 Kobelco Construction Machinery Co.,Ltd. All rights reserved. [S2LC00054ZE11] [0609CsCshWbYs]

3.2.5 CHECKING OIL LEVEL OF HYDRAULIC OIL TANK

WARNING PRESSURE WITHIN HYDRAULIC OIL TANK

The inside of the hydraulic tank is dangerous because it is high temperature and pressurized.
Before removing the filler port plug, stop the engine, remove breather head cap (1), and then press the valve to release the pressure in the hydraulic oil tank.

Notice

For refilling procedures of the hydraulic oil, see "5000 HOUR INSPECTION & MAINTENANCE PROCEDURES" in Chapter 4.

The hydraulic oil tank is on the right side.

1. Move the machine to a level and firm place.
2. Retract the arm cylinder and bucket cylinder, and place the bucket and dozer (when installed) on the ground.
3. Stop the engine and move the pilot control shut-off lever to the "LOCKED" position.

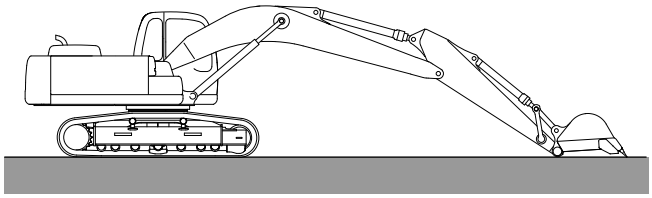

4. Check the oil level through sight level gauge (G) provided on the side of the hydraulic oil tank.
   If the reading falls within the range of "H" to "L", the oil level is normal.
   The oil level varies depending on the oil temperature. Use the following rough standard at inspection.
   - Before operation: Near the "L" level (oil temp. 10 to 30 degrees C)
   - During normal operation: Near the "H" level (oil temp. 50 to 80 degrees C)

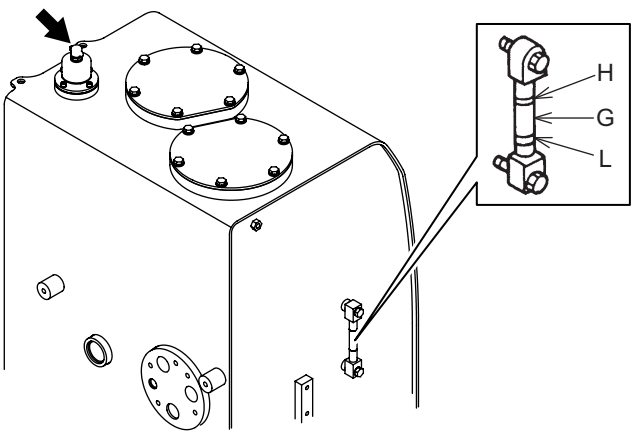

Notice

Do not supply oil to the "H" level or more. If the hydraulic oil tank becomes full, it can cause damages to the tank and the components and spray of the hydraulic oil.

Copyright©2022 Kobelco Construction Machinery Co.,Ltd. All rights reserved. [S2LC00054ZE11] [0609CsCshWbYs]

3.2.6 CHECKING FAN BELT AND AIR CONDITIONING COMPRESSOR BELT

WARNING INSPECTING AND MAINTAINING BELT

Be sure to stop the engine before inspection and maintenance of the engine.
Inspecting and maintaining the running engine may cause severe injury by being caught in the rotating parts, such as the fan and the belt.

CAUTION

Replace the belt with a new one if flaking or breakage is found on the belt by the inspection, slip occurs excessively, or the belt cannot be adjusted to within the adjustment range. Keep the belt away from oils. The service life may be shortened if it slips by oil.

Notice

- When the belt is replaced by a new one, the belt does not have the initial adaptability. Run the engine at idle for 3 to 5 minutes and then adjust the belt tension again.
- After running the engine for about 2 hours, a new belt obtains a complete initial elongation.
- When replacing a set of two belts, be sure to replace both two with new ones.

The engine of this machine is equipped with the alternator, fan, and an air conditioning compressor belts.
Check the belts for wear and damage, and also for tension, and adjust them properly in order to maintain the maximum engine performance and the service life.

- To check the belt tension, press on the center of the belt with your thumb. If the deflection falls within the range shown in the following table, it is normal.

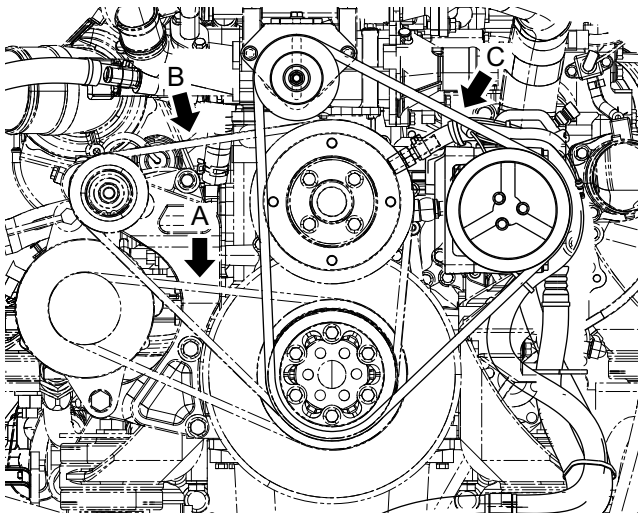

Belt	New Belt Tension mm (inch)	At Inspection mm (inch)	Pushing Force N (lbf)
Alternator (A)	10 to 12 (0.39 to 0.47)	15 to 17 (0.59 to 0.67)	98 (22)
Fan (B)	10 to 12 (0.39 to 0.47)	15 to 17 (0.59 to 0.67)	98 (22)
Air conditioner (C)	5 to 6 (0.20 to 0.23)	7 to 8 (0.28 to 0.32)	27 (6.1)

Copyright©2022 Kobelco Construction Machinery Co.,Ltd. All rights reserved. [S2LC00054ZE11] [0609CsCshWbYs]

3.2.7 ADJUSTMENT OF OPERATOR'S SEAT

WARNING ABOUT ADJUSTMENT OF OPERATOR'S SEAT

- Adjust the operator's seat before the operation or when the operator changes.
- When adjusting the operator's seat, pay attention to hands in order not to be caught between the handle and the seat stand.

Notice

For adjusting procedures of operator's seat, see "HANDLING OF OPERATOR'S SEAT" in Chapter 2.

Adjust the operator's seat in a way so that the operator can operate the control levers, pedals and switches freely, with his/her back contacting with the backrest of the operator's seat.



Copyright©2022 Kobelco Construction Machinery Co.,Ltd. All rights reserved. [S2LC00054ZE11] [0609CsCshWbYs]

3.2.8 ADJUSTMENT OF MIRRORS

WARNING ABOUT ADJUSTMENT OF MIRRORS

Be sure to adjust the mirrors before operation.
When the mirrors are poorly adjusted, visibility cannot be ensured and it could cause severe injury.

CAUTION

Use genuine mirrors only.
When the mirrors are attached to a non-specified place, such as the handrail of the cab entrance, the strength of handrail may be decreased and it may cause damage or falling off of the mirror.

Adjust cab left mirror and handrail mirror in a way so that the blind spot can be minimized when seeing it from the operator's seat.

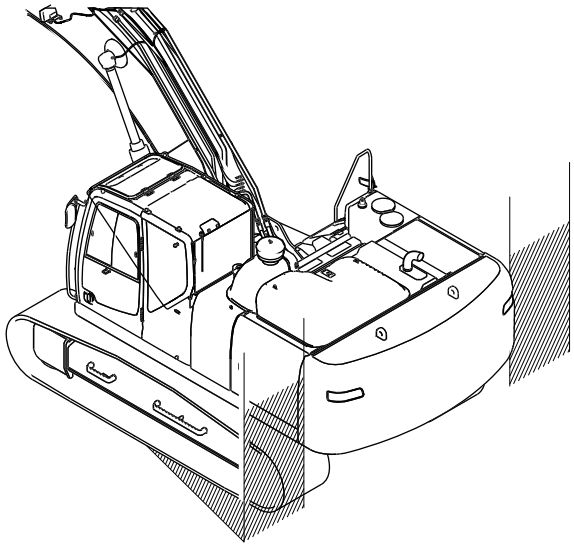

MIRROR A (CAB LEFT SIDE)

Adjust the mirror in the way that a person (or the object of 1.5 m high and 30 cm in diameter) who stands on the left rear end of the machine can be identified by the operator in the operator's seat.

Copyright©2022 Kobelco Construction Machinery Co.,Ltd. All rights reserved. [S2LC00054ZE11] [0609CsCshWbYs]

- Install the mirror to the position shown in the figure.
- Install the mirror in the way not to come in contact with mirror support (1) of the mirror.
- If the movement of the mirror is not smooth, loosen nut (2) of the mirror to adjust it.
  Tightening torque of nut (2)
  M10: 18.6 to 25.5N･m(13.7 to 18.8 lbf･ft)
- Adjust the mirror to reflect the machine side.

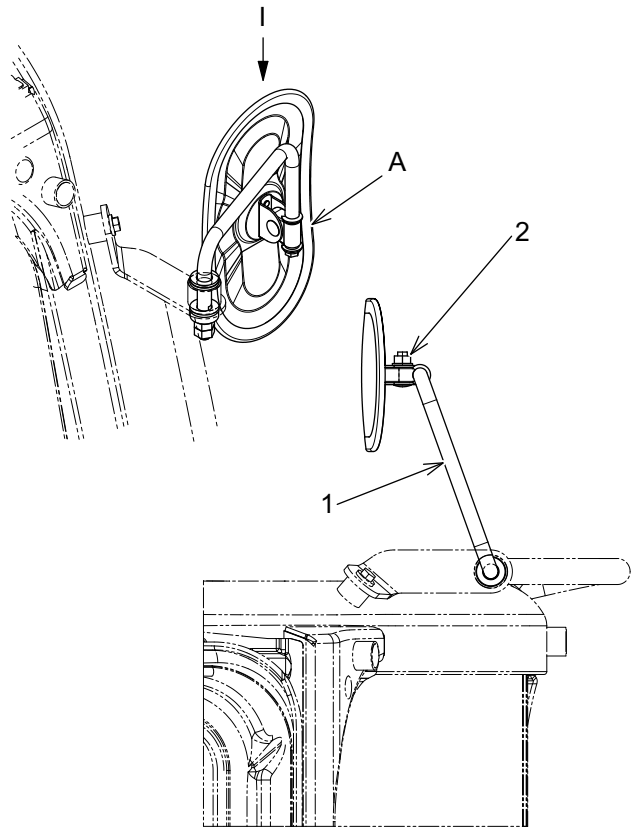

VIEW I

MIRROR B (MACHINE RIGHT SIDE)

Adjust the mirror in the way that a person who stands on the right rear end of machine can be identified by the operator in the operator's seat.

- Install the mirror to the position shown in the figure.
  C: 20mm (0.79") (Reference value)
  D: 45mm (1.78") (Reference value)
  E: 189mm (7.4") (Reference value)
- Install the mirror in the way not to come in contact with stay (3) of the mirror.
- If the movement of the mirror is not smooth, loosen nut (4) of the mirror to adjust it.
  Tightening torque of nut (4)
  M8: 8.6 to 12.7N·m(6.3 to 9.4lbf·ft)
- Adjust the mirror to reflect the machine side.

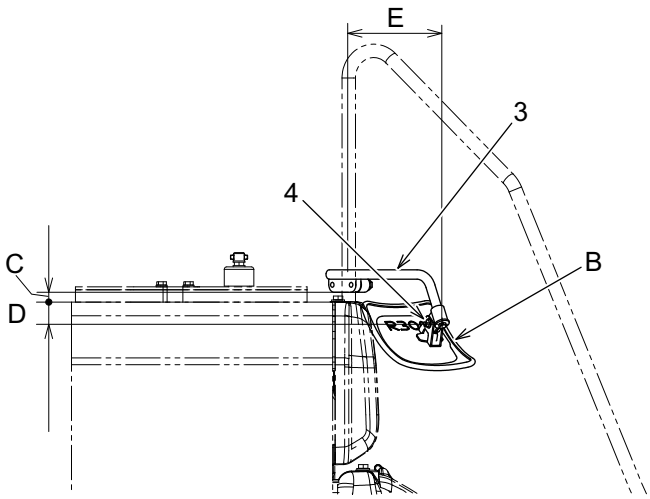

Copyright©2022 Kobelco Construction Machinery Co.,Ltd. All rights reserved. [S2LC00054ZE11] [0609CsCshWbYs]

CAMERA (MACHINE REAR SIDE)

(1)Gauge cluster (Monitor)

(2)Converter

(3)Rearview camera

Blind spot range

L1:610mm(24")

L2:1225mm(4’0")

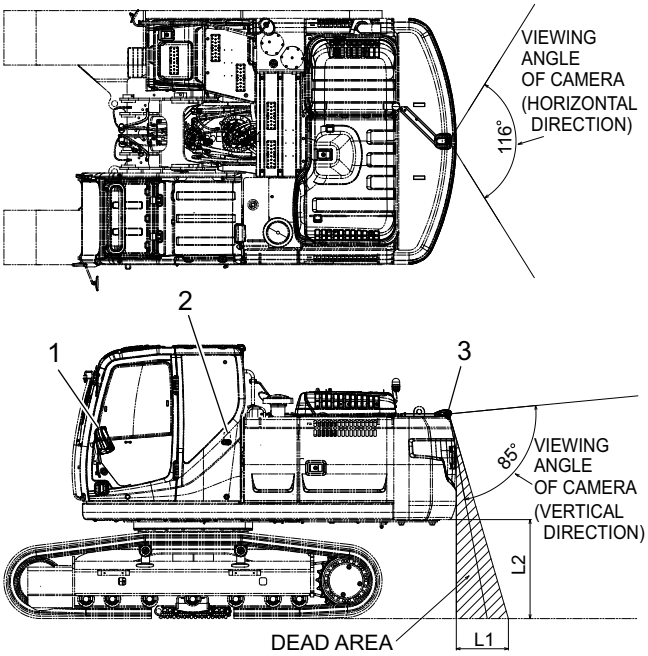

3.2.9 CHECKING MULTI-DISPLAY

Before starting the engine, check the display status of the multi-display on the gauge cluster.

⚠CAUTION

When the warning is displayed on the multi-display, ask your KOBELCO authorized dealer for inspection.

1. Make sure the pilot control shut-off lever is in the "LOCKED" position.
2. Make sure all control levers are in the "NEUTRAL" position.
3. Turn the key of the starter switch to the "ON" position.
4. Check that no warning is displayed on the multi-display.

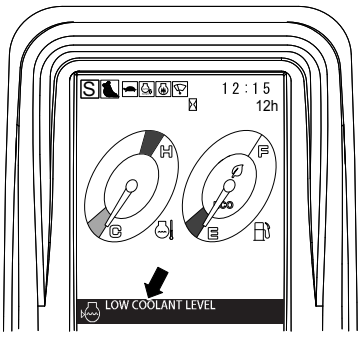

Copyright©2022 Kobelco Construction Machinery Co.,Ltd. All rights reserved. [S2LC00054ZE11] [0609CsCshWbYs]

3.2.10 CHECKING WORKING LIGHT

While the starter switch is in the "ON" position, press the working light switch to turn on the working lights on the boom and on the right side of the front. If they do not light, presumably light bulbs are burned out or the electrical wire is broken. Ask your KOBELCO authorized dealer for repair.

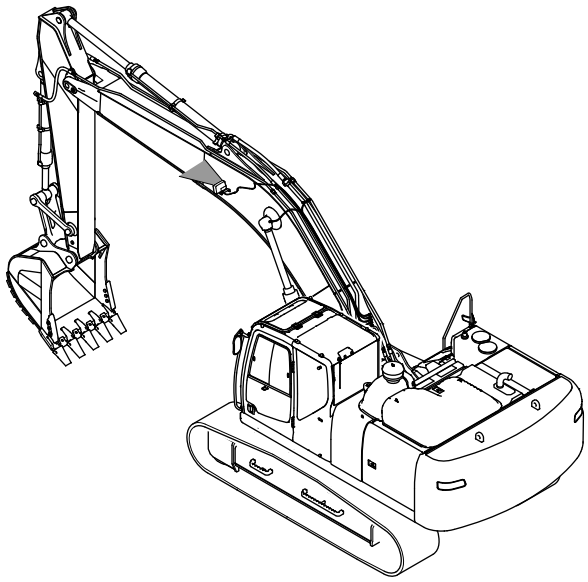

3.2.11 CHECKING OF AIR CLEANER INLET

- Check that no mud, leaves, and snow, etc. are accumulated around the air cleaner inlet.
- When it is covered with snow, remove it.
- When washing the machine with high-pressure water for cleaning, be careful not to let the water enter the inlet.

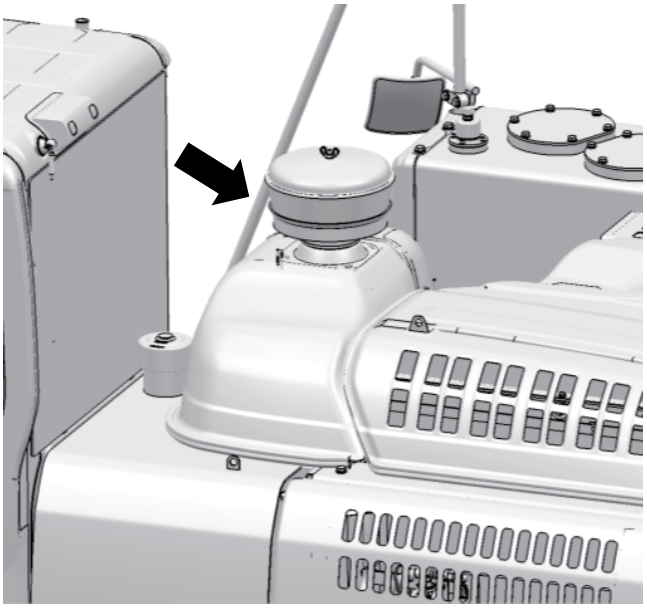

Copyright©2022 Kobelco Construction Machinery Co.,Ltd. All rights reserved. [S2LC00054ZE11] [0609CsCshWbYs]

3.3 STARTING ENGINE

WARNING ABOUT WHEN STARTING ENGINE

After making sure that the area around the machine is clear of people and obstacles, sound the horn and start the engine.

Notice

- Do not hold the starter switch in the START position for more than 15 seconds. If the engine does not start, return the key to the "OFF" position once, wait at least 30 seconds, and then try it again. If this procedure is not followed, it will cause a starter failure and battery discharge.
- At the time of engine start, when the warning is displayed on the multi-display, stop the engine immediately, find the cause, and repair the failure part if necessary.

3.3.1 START-UP UNDER NORMAL TEMPERATURE CONDITIONS

1. Make sure pilot control shut-off lever (1) is in the "LOCKED" position.
   A: "LOCKED" position
   B: "UNLOCKED" position
2. Make sure all control levers are set to the "NEUTRAL" positions.

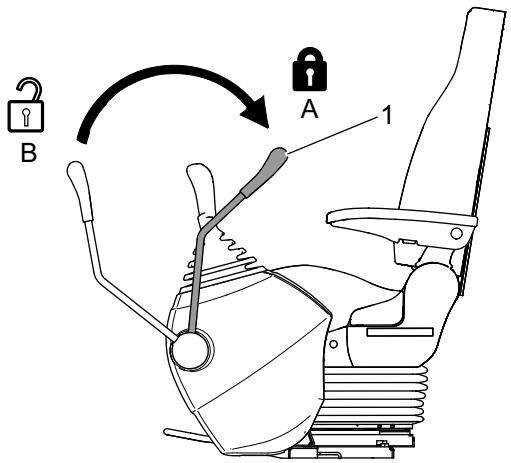

3. Turn engine throttle (2) to the low idle position.
4. Turn the key of starter switch (3) to the "ON" position and check the operation status of the multi-display.
5. Turn the key of starter switch (3) to the "START" position to start the engine.
6. Release your hand from key (3) immediately after the engine starts. The starter key will return to the "ON" position by itself.

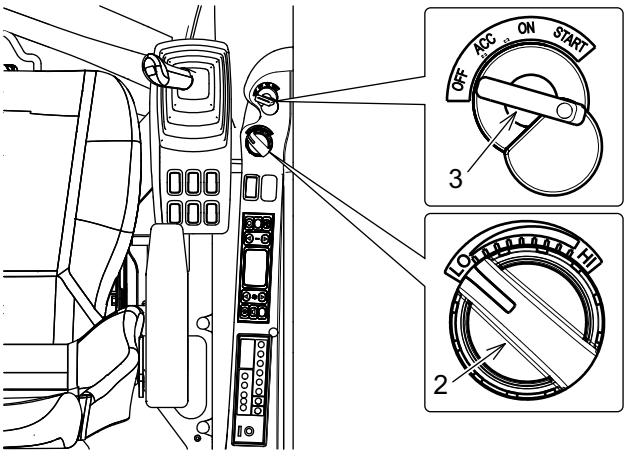

Copyright©2022 Kobelco Construction Machinery Co.,Ltd. All rights reserved. [S2LC00054ZE11] [0609CsCshWbYs]

3.3.2 START UP IN COLD CONDITIONS

In cold weather, due to increase in oil viscosity (hardens) and decrease in battery performance, starting the engine may be difficult.

Notice

For the engine start up procedures with the automatic warming-up system, see "USER MENU SETTING" in Chapter 2.

1. Make sure pilot control shut-off lever (1) is in the "LOCKED" position.
   A: "LOCKED" position
   B: "UNLOCKED" position
2. Make sure all control levers are set to the "NEUTRAL" positions.

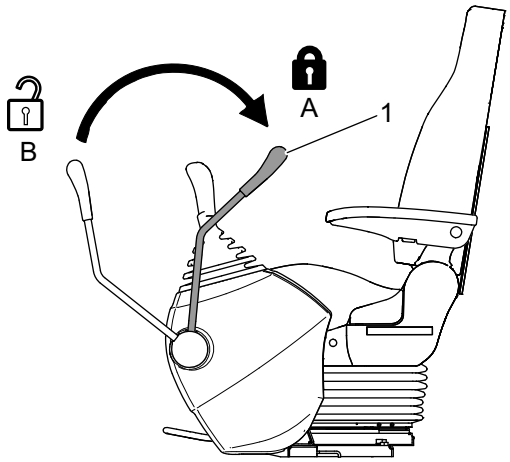

3. Turn engine throttle (2) to the low idle position.
4. Turn the key of starter switch (3) to the "ON" position and hold the position.
   When the coolant temperature decreases below 10 degrees C, the glow plug is preheated automatically by the engine coolant temperature sensing.
5. Check the operation status of the multi-display.
6. After having completed the preheating (within five seconds), turn the key of starter switch (3) to the "START" position to start the engine.
7. Release your hand from key (3) immediately after the engine starts. The starter key will return to the "ON" position by itself.

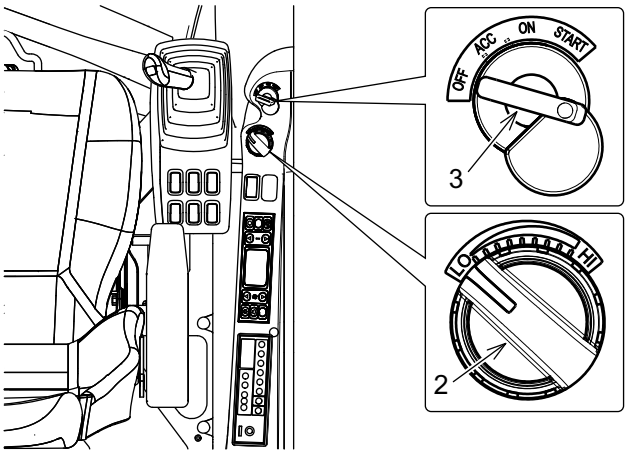

Copyright©2022 Kobelco Construction Machinery Co.,Ltd. All rights reserved. [S2LC00054ZE11] [0609CsCshWbYs]

3.3.3 USING JUMPER CABLES

WARNING STARTING ENGINE BY JUMPER CABLES

- Combustible gas (hydrogen gas) is generated in the battery. Do not allow sparks or flames to come in contact with the battery to avoid catching a fire and triggering an explosion.
- Do not allow the normal machine to come in contact with the disabled one.
- Wear protective glasses and rubber gloves when using jumper cables to start the engine.
- Never allow the positive and negative side clips of the jumper cables to come in contact with each other when connecting the jumper cables.
- Do not mistake positive (+) for negative (-) or vice versa in the jumper cable connection. When the negative jumper cable is finally connected to the upper structure of the disabled machine, it may generate sparks. Connect the jumper cable to a ground surface as far as possible from the battery.
- If the battery electrolyte is frozen, do not attempt to start the engine with another power supply.
- Wrong connection of the jumper cables may cause explosion of the battery.
- The starting system of this machine is 24 volts. Therefore the boost battery voltage in use should be 24 volts. The application of high voltage employed for a welding machine, etc. in engine start may cause damage to the electrical system.

CAUTION

- Use the battery of which the capacity is equivalent to that of the disabled machine for the normal machine.
- Select the jumper cables and clips with a proper size for the battery.
- Check the jumper cables and clips for damage and corrosion.
- Connect the clip securely.
- Check that the control lock lever is in the "LOCKED" position.
- Check that each control lever is returned to the neutral position.
- The starter switches on both the normal and disabled machines must be held in the "OFF" position. Because when the power is connected, it may cause unexpected move of the machines and it is dangerous.

1. Put the attachment on the ground, return all control levers to the neutral position and then set the control lock lever to the "LOCKED" position.
2. Set the starter switch to the "OFF" position for both the normal machine and the disabled machine.
3. Remove the terminal cover of the battery, and connect the jumper cable (red) clip to the positive (+) terminal on the battery of the disabled machine.
4. Connect the jumper cable (red) clip to the positive (+) terminal on the battery of the normal machine.
5. Connect the jumper cable (black) clip to the negative (-) terminal on the battery of the normal machine.

Order of connecting the cable ①→②→③→④
Order of removing the cable ④→③→②→①

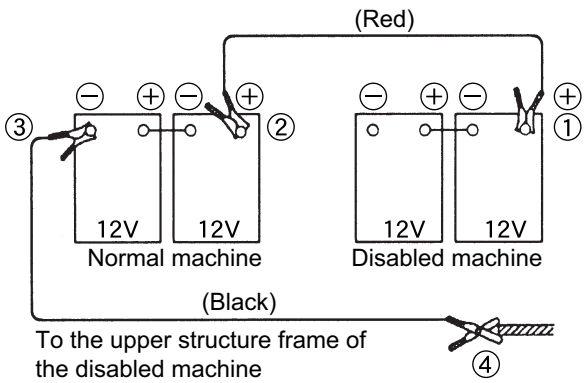

6. Finally, connect the clip of the other end of the negative (-) jumper cable (black) to the upper structure frame of the disabled machine.
7. Start the engine of the normal machine, and run it for about 10 minutes at high idle. The battery of the disabled machine is partially charged.
8. Start the engine of the disabled machine.

Copyright©2022 Kobelco Construction Machinery Co.,Ltd. All rights reserved. [S2LC00054ZE11] [0609CsCshWbYs]

9. Soon after the starting of the engine of the disabled machine, immediately remove the jumper cables in the reverse order of the connection.
10. Finally, check and repair the cause of the problem of the start/charging system on the disabled machine.

Copyright©2022 Kobelco Construction Machinery Co.,Ltd. All rights reserved. [S2LC00054ZE11] [0609CsCshWbYs]

3.4 STOPPING MACHINE ENGINE

1. Place the attachment on the ground before stopping the engine.
2. Pull up the pilot control lock lever to the "LOCKED" position.
3. Turn engine throttle (1) to the low idle position.
4. Turn starter key (2) to the "OFF" position to stop the engine.
5. Remove starter key (2) and store it.

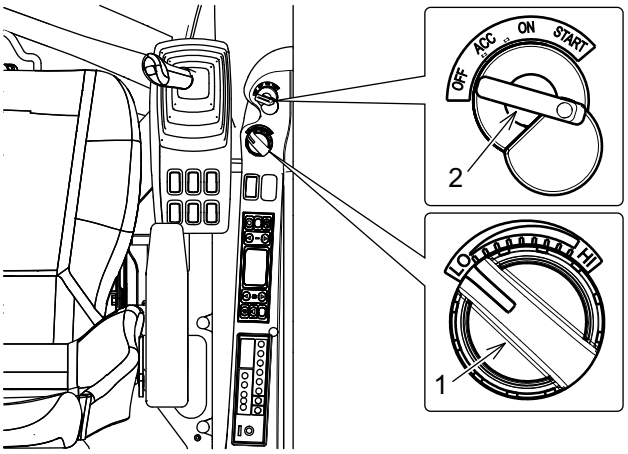

Copyright©2022 Kobelco Construction Machinery Co.,Ltd. All rights reserved. [S2LC00054ZE11] [0609CsCshWbYs]

3.5 CHECK AFTER STARTING ENGINE

Before operation, be sure to inspect and check the machine after starting the engine. If any failures are found, contact your KOBELCO authorized dealer.

3.5.1 CHECK OF PILOT CONTROL SHUT-OFF LEVER

Check that the locking function of the pilot control shut-off lever is proper.
See "PILOT CONTROL SHUT-OFF LEVER" in Chapter 2.

1. Move the pilot control shut-off lever to the "LOCKED" position.
2. Make sure that the attachment is not operated and swing and travel operations are not performed even though each of control levers and pedals is operated.

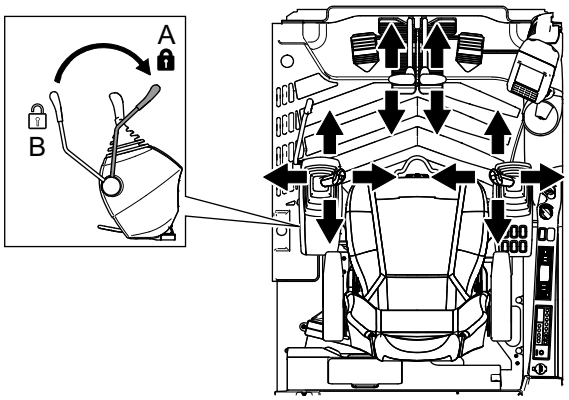

Copyright©2022 Kobelco Construction Machinery Co.,Ltd. All rights reserved. [S2LC00054ZE11] [0609CsCshWbYs]

3.5.2 CHECK OF ENGINE AND MULTI-DISPLAY

1. Check that no warnings are displayed and the indicators of engine coolant temperature meter (1) and fuel level meter (2) are in the proper range on the multi-display.

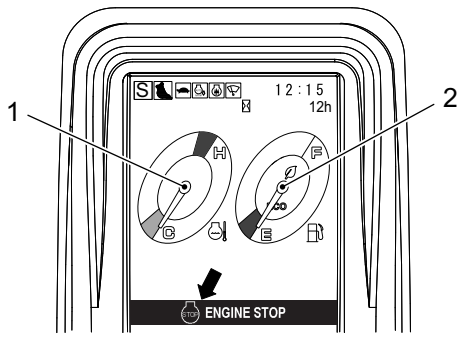

CAUTION

When the warning is displayed on the multi-display, ask your KOBELCO authorized dealer for inspection.

2. Check the areas around the engine for oil leakage and water leakage.
   When standing up from the operator's seat, be careful about handling of the pilot control shut-off lever.

WARNING CONTROL OF LEVERS

- Before operation, be sure to pay attention to the safety of the surroundings and operate each lever slowly to fully make sure that the machine movement is in accordance with the control pattern indicated on the control pattern label.
- If you operate the machine while the control pattern label does not match the actual machine movement, it may cause severe personal injury.
- When the label does not match the actual machine movement, replace them with a proper one.
- When stopping swing operation, stop it earlier than your intended position by taking the swing distance after returning the swing lever to the neutral position into account.

WARNING INSPECTION OF ENGINE

When inspecting the engine, do not stretch out your hand to rotating parts and hot parts. It can catch your hand or cause burns, resulting in serious injury.

3. Check that the exhaust sound, the color of exhaust gas and vibrations of the engine are normal.

Notice

Color classification for identifying the exhaust gas state (After warming-up at no load)
Colorless or light blue: Normal (Perfect combustion)
Black: Abnormal (Incomplete combustion)
White: Abnormal (Oil loss by way of piston ring or valve guides)
The smoke may look white in winter due to cold weather.

Copyright©2022 Kobelco Construction Machinery Co.,Ltd. All rights reserved. [S2LC00054ZE11] [0609CsCshWbYs]

3.6 WARMING-UP

WARNING ABOUT WARMING-UP

- The proper hydraulic oil temperature for this machine is about 50 degrees C. When the hydraulic oil temperature is 25 degrees C or below, rapid operations may cause severe damage to the hydraulic components. Before starting the operation, warm the hydraulic oil to 25 degrees C or above.
- If the attachment/equipment is operated without enough warming-up operation, the response of the attachment to the control lever is delayed and sometimes it moves in an unexpected manner for the operator. Therefore, be sure to perform the warm-up operation. Especially in cold weather, a sufficient warming-up operation is necessary.

Notice

For the engine start up procedures with the automatic warming-up system, see "USER MENU SETTING" in Chapter 2.

3.6.1 ENGINE WARMING-UP

Notice

Avoid idling because it may cause poor engine performance and trouble.

1. Run the engine for about 5 minutes with no load at middle speed by setting engine throttle (1) to the middle between the low idle and the full speed positions.

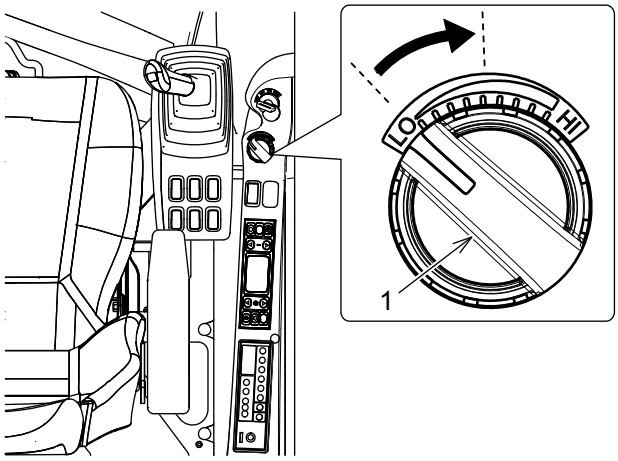

2. When the pointer of engine coolant temperature meter (2) moves and points somewhere in the white range, the warming-up operation of the engine is completed.

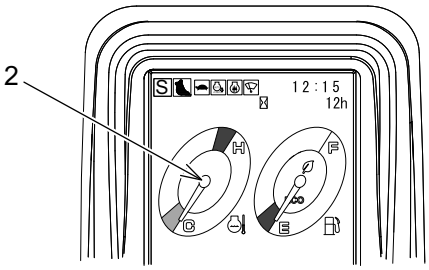

Copyright©2022 Kobelco Construction Machinery Co.,Ltd. All rights reserved. [S2LC00054ZE11] [0609CsCshWbYs]

3.6.2 WARMING-UP HYDRAULIC OIL

Perform warming-up of the hydraulic oil after engine warming-up is completed.

1. Push pilot control shut-off lever (1) down and forward and set it at the "UNLOCKED" position.
2. Raise the boom to the height where the bucket can be operated.

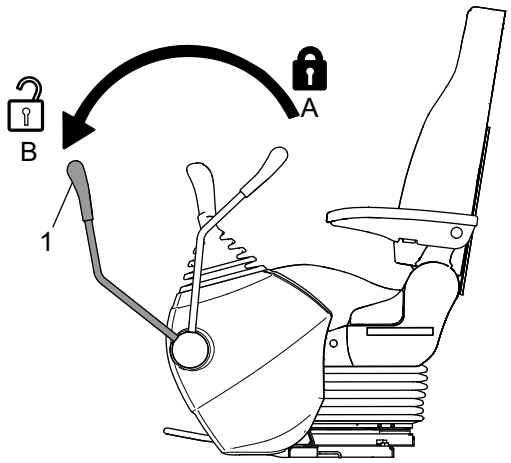

3. Move the right control lever slowly toward bucket digging side (C) to the stroke end position and perform relief operation for about 2 minutes.
4. After that, slowly extend and retract each cylinder several times and circulate the warm hydraulic oil in all operation circuits.
5. When the warming-up is not enough, perform the relief operation at bucket digging side (C) for another 2 minutes, and after that, extend and retract each cylinder several times, and circulate the warm hydraulic oil in all operation circuits.
6. Also perform swing and traveling operations slowly to circulate the warm hydraulic oil.

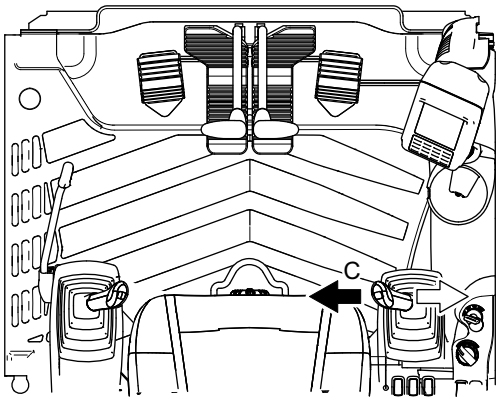

Copyright©2022 Kobelco Construction Machinery Co.,Ltd. All rights reserved. [S2LC00054ZE11] [0609CsCshWbYs]

3.7 AUTO IDLING STOP FUNCTION

CAUTION

This machine is equipped with auto idling stop function to save the fuel consumption and exhaust gas at the time when the engine is stopping.

- When auto idling switch is on, if the engine is running the engine stops after an elapse of the specified time from when the safety lock lever is pulled up.
- After the auto idling stops, when necessary to restart the engine, start the engine after returning the starter key switch to ACC or OFF once and the throttle potentiometer to the low idling position. But it is impossible to start the engine again until the buzzer stops sounding after the engine stops.
- If you would like to perform warming-up of the engine, operate the air conditioner, or use the working light continuously with the pilot control lock lever in the "LOCKED" position, turn the auto idle stop function "OFF". With the auto idle stop function turned “ON”, the engine stops, so that the function stops.
- When necessary to leave the operator seat, always turn the starter switch off.
- When the failure warning of "engine coolant temperature" or "coolant level” appears, or auto warming-up is working, the auto idle stop function does not work regardless whether the auto idle stop function turns "ON" or "OFF".
- Do not use auto idling stop mode when lifting.

This switch is usually set to "OFF". When the auto idling stop function is selected, the engine stops automatically after an elapse of the specified time with the control lock lever (1) set to "LOCKED" position (A) during engine operation. This function is effective in saving of fuel and in restraint of exhaust gas by setting auto idling stop function.

- As for the setting of the auto idle stop function, see "Setting of auto idle stop" in Chapter 2.
- The default setting of the interval until engine stop is 60 seconds. To change the set interval, contact your KOBELCO authorized dealer.

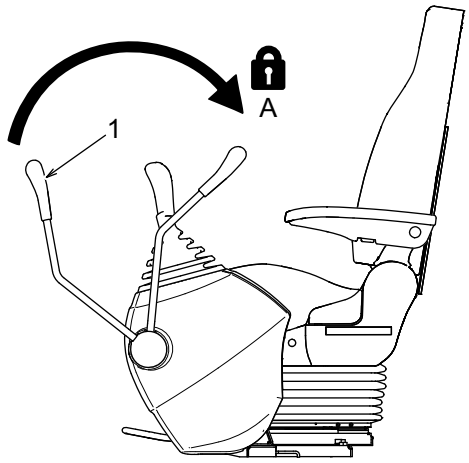

Notice

- After setting safety lock lever to "LOCKED" position (A), the engine changes to "DECEL" speed about 4 seconds later.
- Buzzer sounds for 5 seconds before engine stops.

3.7.1 RESTART AFTER AUTO IDLE STOP

CAUTION

When leaving the operator’s seat, be sure to set the starter switch to the "OFF" position.

1. Check that the buzzer stops.
2. Turn the engine throttle to the low idle position.
3. Return the key of the starter switch to "ACC" or "OFF" once and then restart the machine.

Copyright©2022 Kobelco Construction Machinery Co.,Ltd. All rights reserved. [S2LC00054ZE11] [0609CsCshWbYs]

3.8 SELECTION OF WORK MODE

Press work mode select switch (1) to switch between three modes in the order of "S", "E" and "H".
Select a proper work mode according to the work condition and purpose.
The selected work mode is displayed on the left upper corner of the multi-display.

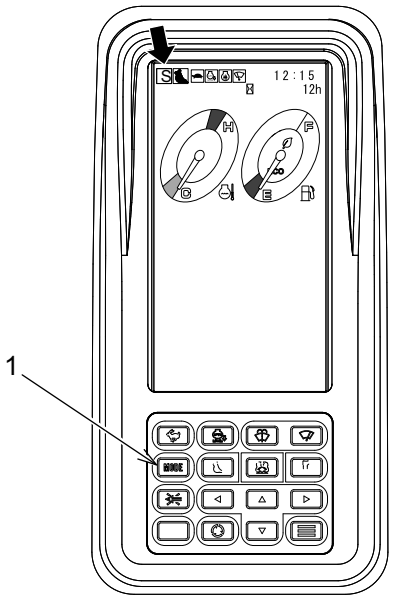

Notice

The work mode after the engine start always starts from the "S" mode.

S mode:

"S mode" is suitable for a standard digging work and loading operations. It provides good fuel consumption and is well-balanced with a workload.

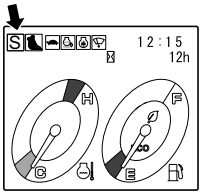

E mode:

"ECO mode" focuses on alow fuel consumption operation.

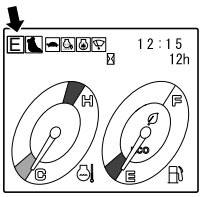

H mode:

"H mode" is suitable for a heavy digging work, which provides high speed and gives priority to a workload.

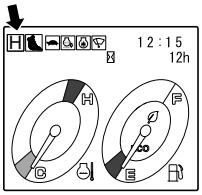

Copyright©2022 Kobelco Construction Machinery Co.,Ltd. All rights reserved. [S2LC00054ZE11] [0609CsCshWbYs]

3.9 SWITCHING ATTACHMENT MODE

Use the attachment mode select switch to switch between the "Bucket", "Nibbler", and "Breaker" modes.
Select an appropriate mode according to the three types of the attachment: "Bucket", "Nibbler", or "Breaker" modes. Before operation, always check that the attachment mode is appropriately set.

Attachment Mode	Switch Condition	Multi-Display Indication	Selection of Attachment
Breaker mode	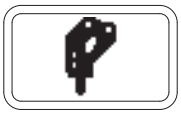	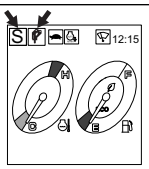 The breaker symbol appears. The work mode of "S", "E", or "H" is shown upper left.	Select this mode when the attachment like a breaker requires the single flow circuit.
Nibbler mode		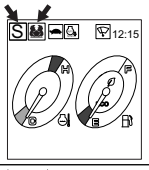 The nibbler symbol appears. The work mode of "S", "E", or "H" is shown upper left.	Select this mode when using the attachment with a flow and return circuit like a nibbler (crusher).
Bucket mode		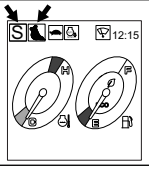 The bucket symbol appears. The work mode of "S", "E", or "H" is shown upper left.	Select this mode when digging.

For the description of attachment and hydraulic circuit, see Chapter 8 "OPTIONAL EQUIPMENT".

⚠CAUTION

- When working with a hydraulic breaker or nibbler (crusher) installed, be sure to check that an appropriate attachment mode is selected, by seeing the attachment mode select switch and the multi-display.
- When the attachment mode is inappropriate, use the attachment mode select switch to switch to an appropriate mode.
- When performing breaker work, be sure to select the breaker mode. Working in a mode other than the breaker mode causes damage in the hydraulic components and/or breaker.
- Be sure to place the attachment to the ground and ensure safety before switching the attachment mode. In particular, switching to the breaker mode during nibbler (crusher) work may cause a holding load to fall off.
- When the attachment mode icon of "digging", "nibbler", or "breaker" flickers, it tells that the attachment mode is not proper.

Copyright©2022 Kobelco Construction Machinery Co.,Ltd. All rights reserved. [S2LC00054ZE11] [0609CsCshWbYs]

3.10 MACHINE OPERATION

The machine operation procedures described below provide operators with basics which should be learned and understood, thoroughly. You can further improve your operational skill by throughly learning the performance and structure of this machine.

3.10.1 PRECAUTIONS OF MACHINE OPERATION

WARNING WHEN OPERATING MACHINE

- When starting the machine, check the safety around the machine and sound the horn before starting the machine.
- Keep the area around the machine clear of people.
- When the control lever is operated during the auto acceleration operation, the engine speed increases abruptly. Operate the control lever carefully.

CAUTION

- The indications on the multi-display do not assure the condition of the devices. Daily maintenance should be performed not only by seeing the multi-display but also by following the procedures described in this manual.
- When abnormality was detected during operation, stop the machine immediately and take proper measures.
- The machine should not be operated until the failure is repaired. Operating the machine with the failure that has not been repaired may result in a serious accidents.

FRONT/REAR AND LEFT/RIGHT OF MACHINE

In this manual, front/rear and left/right are determined by looking the forward direction from the operator's seat with the travel motors at the rear side.

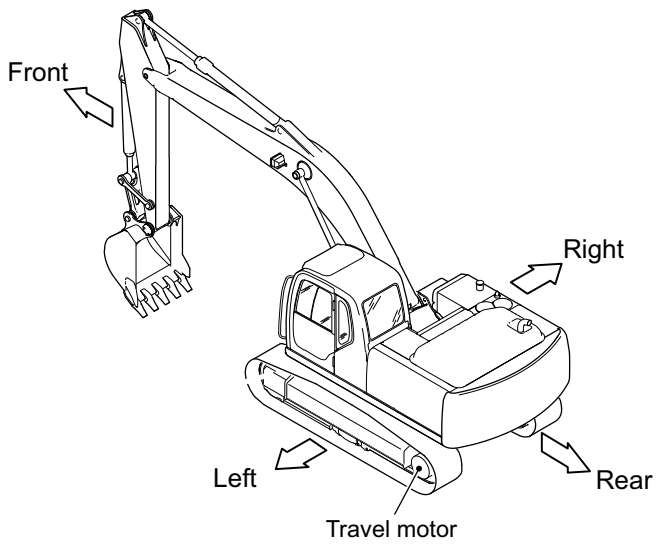

Copyright©2022 Kobelco Construction Machinery Co.,Ltd. All rights reserved. [S2LC00054ZE11] [0609CsCshWbYs]

3.10.2 TRAVEL PROCEDURES

WARNING ABOUT TRAVELING

- Confirm the travel motor position before traveling. When the travel motor is positioned at the front side, the travel lever operation reverses.
  The normal travel control can be performed when the travel motor is at the rear side of the machine and the front idler is at the front side of the machine.
- Sound the horn to warn the workers in the working site.

WARNING ABOUT TRAVEL SPEED

During traveling, do not change the travel speed. Also, the travel speed should be set to the LOW (1st) speed when the machine is traveling on a downhill, or being loaded to/unloaded from a trailer. A sudden change of the machine stability could cause personal injury.

Before starting traveling operation move the control lock lever to "UNLOCKED position" and set the bucket at the height of 30 to 40 cm above the ground.

F: Forward traveling

N: Neutral (Stop)

R: Backward traveling

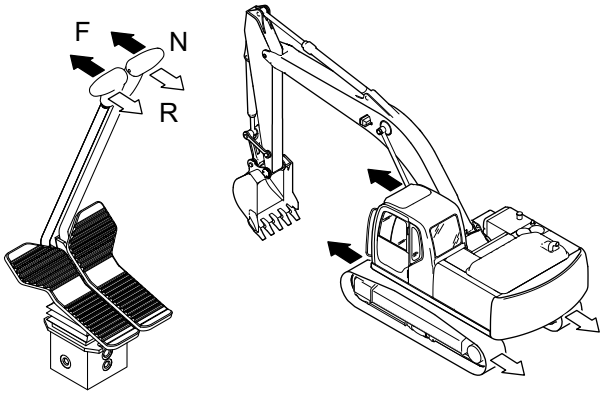

Forward/Reverse traveling

- Push (forward) or pull (backward) both the left and right travel levers simultaneously.
  Both the forward and reverse travel speed can be changed by lever displacement.

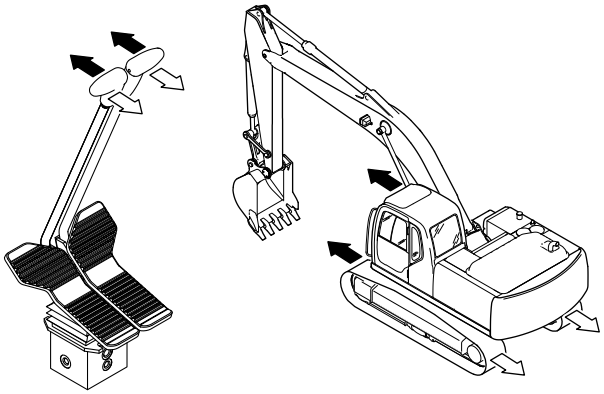

Copyright©2022 Kobelco Construction Machinery Co.,Ltd. All rights reserved. [S2LC00054ZE11] [0609CsCshWbYs]

Pivot turn

This operation drives only one crawler to turn the machine.

- Operate one of the two travel levers to make a pivot turn.

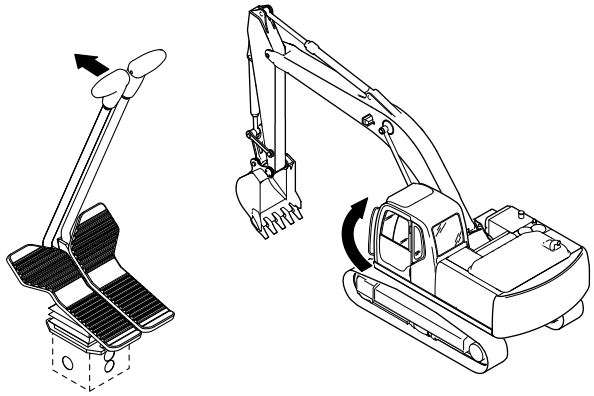

Spin turn

This drives the right and left crawlers in opposite direction each other to turn the machine on the spot.

- Push one of the two travel levers forward and pull the other lever backward simultaneously.

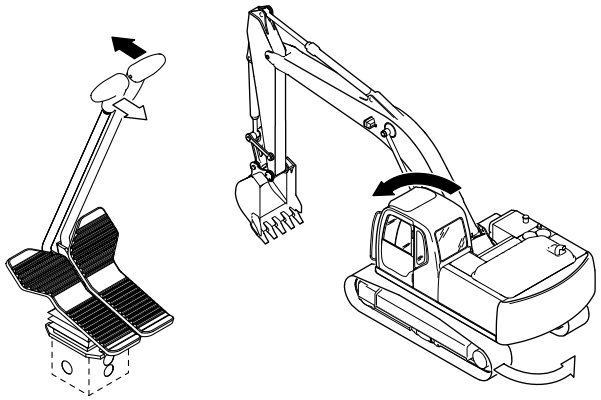

STOP TRAVELING

WARNING ABOUT STOP TRAVELING

Do not stop the machine suddenly, but stop it after slow down the speed as much as possible.

- Put both travel levers (1) in the "NEUTRAL (N)" position.
  The machine stops traveling.

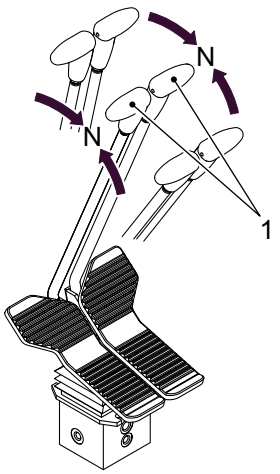

Copyright©2022 Kobelco Construction Machinery Co.,Ltd. All rights reserved. [S2LC00054ZE11] [0609CsCshWbYs]

3.10.3 CHANGING TRAVEL SPEED (1ST AND 2ND)

WARNING ABOUT TRAVEL SPEED

During traveling, do not change the travel speed. Also, the travel speed should be set to the LOW (1st) speed when the machine is traveling on a downhill, or being loaded to/unloaded from a trailer. A sudden change of the machine stability could cause personal injury.

Using the travel speed select switch (1), switch between the HIGH (2nd) and LOW (1st) travel speed.
Every time the switch is pressed, the mode changes as follows: Turtle (1st) -> Rabbit (2nd) -> Turtle (1st) -> Rabbit (2nd).
At the time of engine start, it is automatically set to the LOW (1st) speed.
When traveling at the LOW (1st) speed, the turtle (1st) is displayed, and when traveling at the HIGH (2nd) speed, the rabbit (2nd) is displayed on the multi-display.

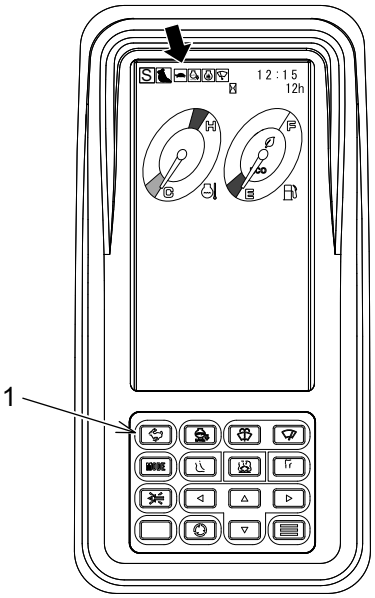

Copyright©2022 Kobelco Construction Machinery Co.,Ltd. All rights reserved. [S2LC00054ZE11] [0609CsCshWbYs]

3.10.4 MACHINE OPERATION IN WATER OR ON SOFT GROUND

IMPORTANT

Take enough care not to immerse the swing bearing, swing pinion and swivel joint into water or soil. When the machine is sunk to the level of or above the swing bearing in the water or soil, the swing bearing and others may be worn abnormally if it is used without any treatment. Apply grease to the greasing points.

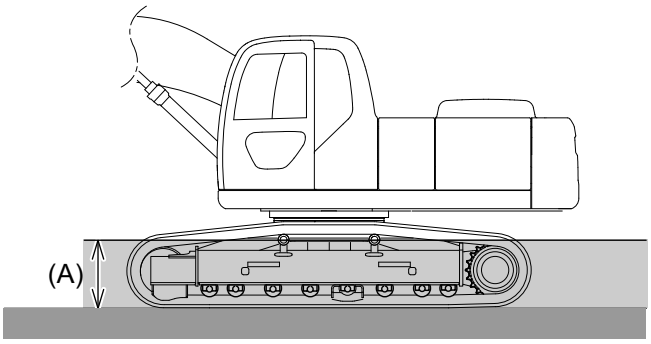

- If the bottom of a river is flat and it flows slowly, the machine can travel in the water up to the depth of the center of upper roller (A).
- When crossing a river, carefully cross the river while checking the condition of the river bottom by the bucket, etc. Never enter the water over the depth of (A).
- On a soft ground, the machine may sink gradually. Pay attention to the travel system and the water depth all the time.
- After traveling in seawater, wash the machine carefully to remove salt.
- On parts soaked in the water for a long time, use a grease gun to apply grease securely, until the old grease comes out from the inside.

A: 800mm (STD), 948mm (HIGH & WIDE)

Copyright©2022 Kobelco Construction Machinery Co.,Ltd. All rights reserved. [S2LC00054ZE11] [0609CsCshWbYs]

3.10.5 GETTING OUT OF SOFT GROUND

Avoid traveling on a soft ground if possible.
Be careful not to get stuck in mud. In case of being stuck in the mud, get out of it using the procedure below.

WHEN ONE SIDE OF MACHINE GETS STUCK IN SOFT GROUND

- When one side of the machine gets stuck in the soft ground, push the bottom of the bucket against a plank or others laid on the ground to lift up the stuck shoe, and put logs or lumbers beneath the crawler belt to escape from the soft ground.

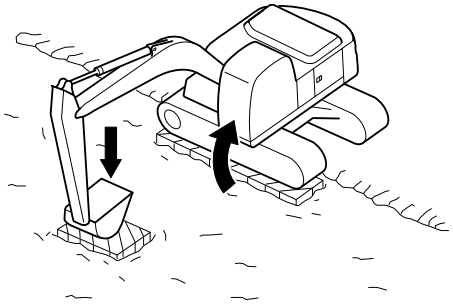

Notice

When using the boom and arm to lift up the machine, push the bottom of the bucket, not the teeth, against the ground.

WHEN BOTH SIDES OF MACHINE GET STUCK IN SOFT GROUND

⚠CAUTION

Operate the machine at the operator's seat. Keep the area around the machine clear of people.

1. When both sides of the crawlers get stuck in the mud and the machine does not move due to slip, put logs or lumbers as described above, wedge the front part of the bucket into the ground, pull the arm just like digging, push the travel levers forward, traveling and pull out the machine.

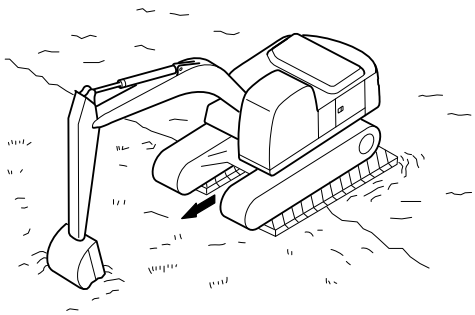

2. If the machine cannot travel due to highly tensed crawlers caused by clogged mud and gravel in the crawlers after traveling on the soft ground, lift each crawler off the ground by pushing the boom and arm against the ground and shake the mud or gravel off the crawler, and then get out of the soft ground. Gravel, or mud clogged in the crawler can be shaken off by lifting the crawler up and moving it forward and backward.

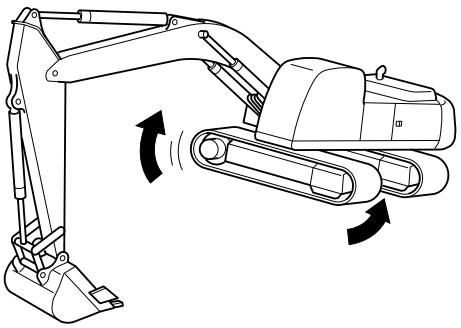

Copyright©2022 Kobelco Construction Machinery Co.,Ltd. All rights reserved. [S2LC00054ZE11] [0609CsCshWbYs]

3.10.6 SWING AND ATTACHMENT OPERATIONS

The following is the explanation of operation of the standard attachment. As to the machine equipped with a special attachment, read the operation manual of the special attachment, too.

WARNING ABOUT THE USE OF THIS MACHINE

To operate this machine, fully read the safety precautions of this manual and understand them thoroughly.

BOOM OPERATION

To operate the boom, move the right control lever forward and backward. Speed of the boom is controlled by the displacement of the control lever.

- A: Pull the right control lever backward to move the boom up.
- B: Push the right control lever forward to move the boom down.
- Return the right control lever to the neutral (center) position to stop the boom.

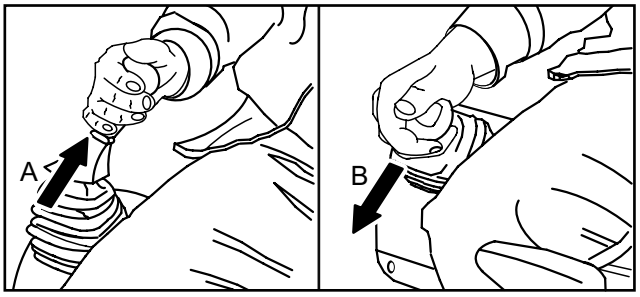

ARM OPERATION

To operate the arm, move the left control lever forward and backward. Speed of the arm is controlled by the displacement of the control lever.

- A: Pull the left control lever backward to move the arm closer to the cab (Arm in).
- B: Push the left control lever forward to move the arm forward and away from the cab (Arm out).
- Return the left control lever to the neutral (center) position to stop the arm.

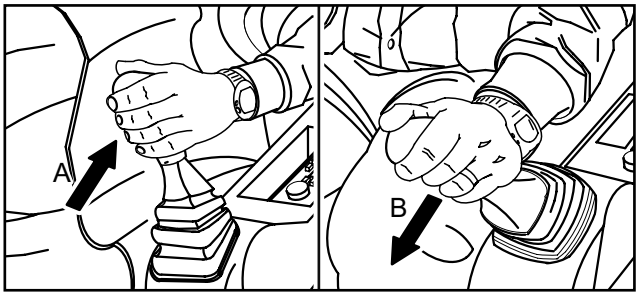

Copyright©2022 Kobelco Construction Machinery Co.,Ltd. All rights reserved. [S2LC00054ZE11] [0609CsCshWbYs]

BUCKET OPERATION

WARNING BUCKET INTERFERENCE

Check clearance between the attachment and the operator's station before starting operation because a certain kinds of attachment and combination of the options installed on the base machine may cause the attachment to interfere with the operator's station or other parts of the machine. Check for interference before operation.

To operate the bucket, move the right control lever left and right. Speed of the bucket is controlled by the displacement of the control lever.

- A: Move the right control lever left to move the bucket to the digging side.
- B: Move the right control lever right to move the bucket to the dumping side.
- Return the right control lever to the neutral (center) position to stop the bucket.

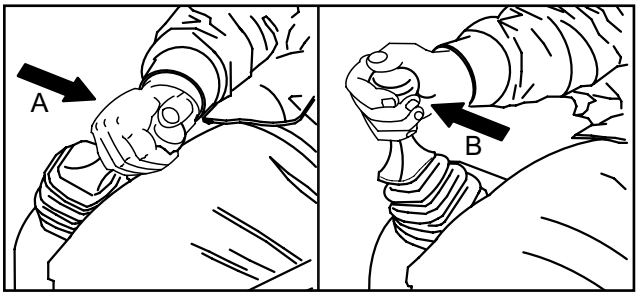

Copyright©2022 Kobelco Construction Machinery Co.,Ltd. All rights reserved. [S2LC00054ZE11] [0609CsCshWbYs]

SWING OPERATION

WARNING PRECAUTIONS TO PREVENT DANGER IN SWINGING

Make sure that the swing area and the surroundings are clear of obstacles and people before beginning operation. Sound the horn or send signals to warn people before starting to operate the machine.

To perform the swing operation, move the left control lever left and right. Speed of the swinging is controlled by the displacement of the control lever.

- A: Move the left control lever left to swing the machine left.
- B: Move the left control lever right to swing the machine right.
- Return the left control lever to the neutral (center) position to stop the swinging.

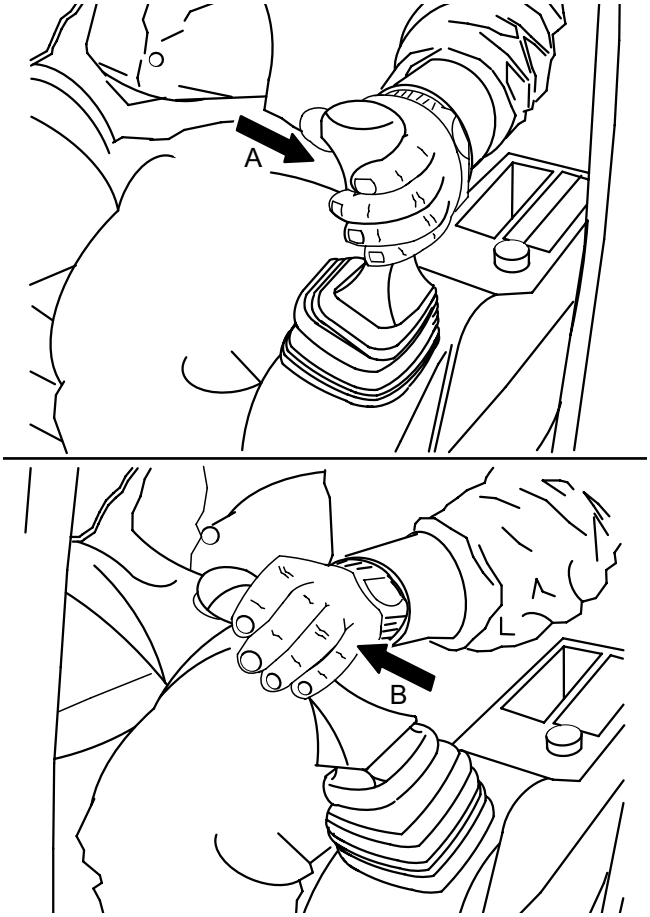

POWER BOOST SWITCH

The power boost switch is located on the grip of the right control lever.
This is used when more powerful digging force is required during bucket digging operation.

- Press the power boost switch with the right thumb to boost the digging force during the bucket digging operation.

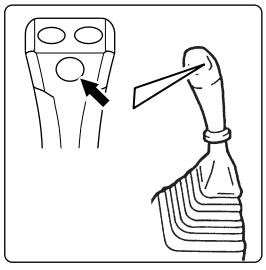

Notice

When a longer arm than standard is equipped, use of power boost switch is prohibited.

Copyright©2022 Kobelco Construction Machinery Co.,Ltd. All rights reserved. [S2LC00054ZE11] [0609CsCshWbYs]

3.11 WORK PROCEDURES OF MACHINE

3.11.1 DIGGING WORK

For digging work, mainly the arm crowding force is used, and the bucket scooping force may be used if necessary.

- When a strong digging force is required, dig slowly while keeping the crossing angle of the boom and the arm at 90 to 110 degrees.
  When lowering the boom, avoid rapid operations. Especially, urgent stop during boom "DOWN" has a great impact on the machine, resulting in adverse effects on parts.
- Point the bucket tooth tips to the digging direction (A) as much as possible, and dig with the bucket positioned at shallow depth (B) and with full stroke. This will reduce the digging resistance and damage to the tooth tips.

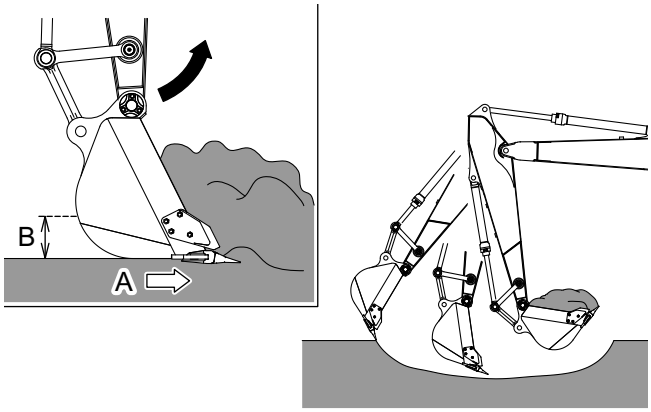

- If soil does not fall out easily, set the bucket in the bucket out position and move the bucket a few times by the control lever.
  Never extend and retract the boom cylinder repeatedly while the arm cylinder is fully extended to fall out the soil.
- When digging a wide trench, dig both sides of it first and dig the center last.
  To improve the efficiency, attach a bucket suitable for trenching and place the crawlers parallel (C) to the trench to dig.

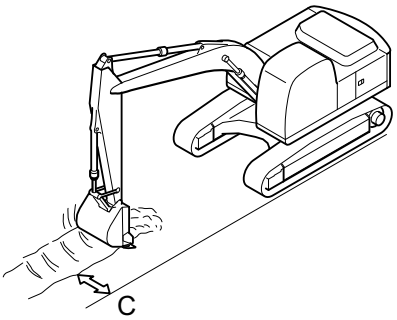

3.11.2 LOADING WORK

- Place a dump truck on where the operator can easily see it and the swing angle is smaller. By this, loading work can be performed efficiently.
  Loading from the rear side of the dump truck is easier and more soil can be loaded compared with loading from the side of the dump truck.

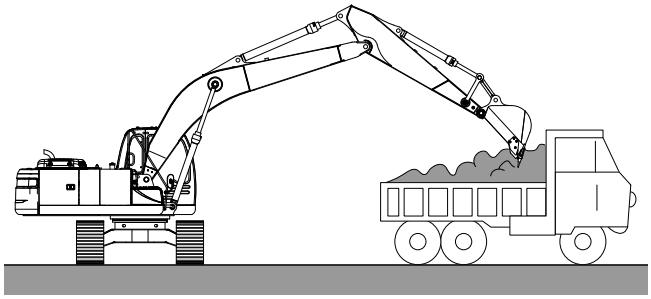

Copyright©2022 Kobelco Construction Machinery Co.,Ltd. All rights reserved. [S2LC00054ZE11] [0609CsCshWbYs]

3.12 ALWAYS PARK MACHINE PROPERLY

1. Travel machine to a safe location on firm, level ground.
2. Lower the attachment to the ground.
   If equipped with a dozer blade, lower it to the ground.
3. Set the auto acceleration switch to the "OFF" position.
4. Pull the control lock lever to the "LOCKED" (up) position.
   If not locked, incidental contact with the control levers, pedals and other control devices may result in unexpected and unintended machine movement.

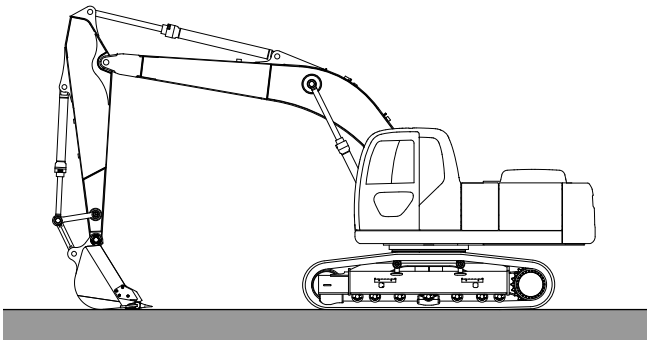

5. Allow engine to idle at low speed for about 5 minutes to cool-down engine.
6. Turn the starter switch to the "OFF" position and remove the key.
   Close and lock the windows and the cab door. Check the windows, doors and all other machine access covers are locked and secure.

3.12.1 PARKING MACHINE ON SLOPE

If the machine must be parked on a slope.

1. The undercarriage and the upper structure and the attachment/equipment must face downhill.
2. Lower the attachment into the ground. If equipped with a bucket, dig the bucket into the ground.
   If equipped with a dozer blade, lower it to the ground.
3. Set the auto acceleration switch to the "OFF" position.
4. Pull the control lock lever to the "LOCKED" (up) position.
   If not locked, incidental contact with the control levers, pedals and other control devices may result in unexpected and unintended machine movement.

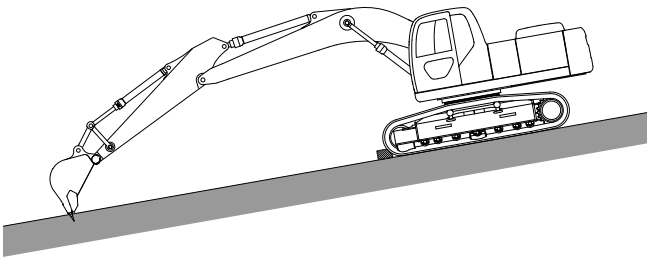

5. Allow engine to idle at low speed for about 5 minutes to cool-down engine.
6. Turn the starter switch to the "OFF" position and remove the key.
   Close and lock the windows and the cab door. Check the windows, doors and all other machine access covers are locked and secure.
7. Block the tracks in the front and the rear.

Copyright©2022 Kobelco Construction Machinery Co.,Ltd. All rights reserved. [S2LC00054ZE11] [0609CsCshWbYs]

3.13 INSPECTION AND CHECK AFTER OPERATION

Check the engine coolant temperature, engine oil pressure and fuel level on the multi-display.

- If there is the engine coolant temperature or the engine oil pressure warning display, move the machine to a safe place and stop the engine immediately. Then repair the machine according to "INSPECTION AND MAINTENANCE CHART" in Chapter 4.
- Check oil and water leakage, the attachment/ equipment, the exterior parts, and the travel system components. If leakage or damage is found, repair it immediately according to "INSPECTION AND MAINTENANCE CHART" in Chapter 4.

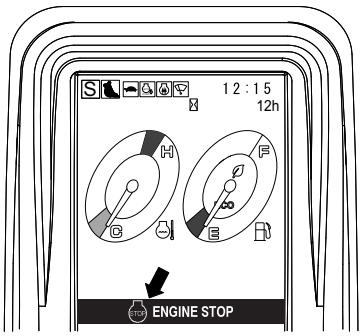

- Refuel the tank to the maximum. Refuel the tank to the maximum after finishing work for a day. Be careful not to refuel the tank to a level more than necessary (to the top end the tank). There is a possibility of overflowing because the fuel expands as the outside air temperature rises.
- Remove mud, etc., stuck to the travel system components.

Copyright©2022 Kobelco Construction Machinery Co.,Ltd. All rights reserved. [S2LC00054ZE11] [0609CsCshWbYs]

3.14 MACHINE OPERATION IN ADVERSE CONDITIONS

3.14.1 OPERATION IN COLD CONDITION

CAUTION

When the ambient temperature is low, starting the engine may be difficult due to decrease of oil liquidity, and the radiator may be damaged due to coolant freezing.

FUEL/OIL

Use good low-viscosity fuel/oil for each device. For the optimum viscosity, see "LUBRICANT, FUEL & COOLANT SPECIFICATIONS" in Chapter 4.

COOLANT

When operating or storing the machine in cold climates, the additive rate of the cooling system should match the expected minimum outdoor temperature.
If the coolant is frozen, it may cause damage to the radiator, cylinder block and cylinder head. When being shipped from the factory, "Long Life Coolant" is used to prevent rust and freezing of the cooling system.
When operating or storing the machine in extreme cold, check the coolant frequently to keep an appropriate concentration. For the concentration of coolant, see "LUBRICANT, FUEL & COOLANT SPECIFICATIONS" in Chapter 4.

Notice

This machine uses a non-amine type long life coolant.

BATTERY

When the ambient temperature is low, the battery capacity may decrease and the battery electrolyte may freeze. Charge the battery full earlier than the specified interval and pay full attention to thermal insulation by covering the battery.
When leaving the machine outdoors overnight, it is recommended to remove the battery and store it in a warm room.
Measure the specific gravity of battery electrolyte after its temperature becomes almost the same as the outdoor temperature, instead of immediately after operation. The charging rate can be calculated roughly by measuring the specific gravity and using the table below.

Specific Gravity of Battery Electrolyte

Charging rate	Battery electrolyte temperature		
	-20 degrees C	0 degrees C	20 degrees C
100%	1.31	1.29	1.28
90%	1.29	1.28	1.26
80%	1.28	1.26	1.25
75%	1.27	1.25	1.24

AFTER OPERATION

To prevent malfunctions of the travel system components due to freezing of mud and water stuck to them, follow the precautions below.

- Remove mud and water stuck to the machine sufficiently. Especially, be sure to drain off the water from the travel system, and then park the machine on a dry and firm ground to prevent the travel system from freezing.

Copyright©2022 Kobelco Construction Machinery Co.,Ltd. All rights reserved. [S2LC00054ZE11] [0609CsCshWbYs]

- Wipe the cylinder rod completely. If frozen mud or water is stuck to the cylinder rod surfaces, the seal may be damaged when retracting the cylinder. Retract each cylinder to the minimum size to minimize the exposed area of the rod.
  For the storing position, see "PRECAUTIONS FOR LONG-TERM STORAGE" in Chapter 3.

3.14.2 OPERATION AT SEASHORE

After operation, wash the machine carefully to remove salt, and apply anti-rust treatments with oil and grease, if necessary.

3.14.3 OPERATION IN SANDY AND DUSTY AREAS

- Clean and change the air cleaner element earlier than the specified interval.
- Clean the radiator earlier than the specified interval to prevent the radiator core from being clogged with dust.
- Be careful to prevent dust entering when refueling, and refilling oils. Inspect the filter element earlier than the specified interval.
- Especially, clean the starter and alternator earlier than the specified interval to prevent deposit of dust on them.

Copyright©2022 Kobelco Construction Machinery Co.,Ltd. All rights reserved. [S2LC00054ZE11] [0609CsCshWbYs]

3.15 PRECAUTIONS FOR LONG-TERM STORAGE

When storing the machine for a long period (one month or longer), maintain the machine with attention to the following points, to prevent decrease in function at the next operation.

3.15.1 WASHING MACHINE

Wash the machine thoroughly, inspect and maintain the travel system components and apply touch-up to the peeling paint and scratches. Apply grease to the greasing points.

⚠CAUTION

DO not wash the inside of the cab.
When washing the machine, cover the CPU and the electric components to prevent water or steam from splashing on or contacting with them.

3.15.2 REFILLING OIL/GREASING

Check the level and contamination of the fuel and hydraulic oil. Refill the oil if the level is low, and replace the oil if the oil is contaminated.

- To prevent condensation in the fuel tank, supply new clean fuel fully to the upper limit.
- Apply a sufficient quantity of anti-rust oil to any parts which rust easily, especially to the exposed area of each cylinder piston rod.

3.15.3 BATTERY

- To compensate the self-discharge during storage, perform auxiliary charge at least once a month.
- Confirm that the battery power-off switch is set to the "OFF" position to cut off the current.
- Remove the negative (-) terminal from the battery, and remove the battery from the machine for storage.
  Be careful not to connect the negative (-) terminal of the battery to the body (ground terminal) with a tool when removing the battery. It will cause short circuit even when the battery power-off switch is set to "OFF".

⚠CAUTION

Before turning the battery power-off switch to the "O (OFF)" position or removing the terminal of the battery, turn the starter switch to the "OFF" position and wait 5 minutes or more.
When turning off the battery power-off switch immediately after the engine is stopped, the exhaust gas cleaning device may be damaged.

3.15.4 COOLANT

If there is a possibility of freezing, mix the antifreeze (non-amine type) into the radiator.
However, normally it is not necessary because long life coolant is already mixed at the time of shipment. See "LUBRICANT, FUEL & COOLANT SPECIFICATIONS" in Chapter 4.

Copyright©2022 Kobelco Construction Machinery Co.,Ltd. All rights reserved. [S2LC00054ZE11] [0609CsCshWbYs]

3.15.5 PREVENTION OF DUST AND MOISTURE

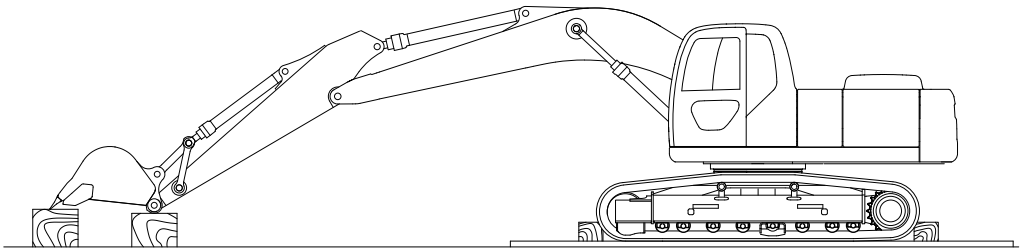

Store the machine in a dry indoor location. If you place the machine outside unavoidably, lay lumbers on a flat ground and cover the machine with a sheet. Especially, cover the muffler, hydraulic oil tank breather, fuel tank cap, and swing motor level gauge.
To protect the exposed part of the rod, fully retract the arm and bucket cylinders, be sure to place the bucket on the ground and chock the crawlers.

3.15.6 PERIODICAL LUBRICATING OPERATION (DURING STORAGE)

Once a month, start the engine to move the machine and also perform lubricating operation to supply lubricant to every kind of parts of the machine. If the oil film shortage occurs on parts and rust is formed on parts, it may cause abnormal wear at the next operation.

- Check the engine oil level and coolant level before starting the engine. Refill engine oil or coolant if its level is low.
- Wipe off the anti-rust oil from the cylinder rods. After the lubricating operation, apply the anti-rust oil again.
- After starting the engine, fully warm-up the machine.
- If the machine is stored indoors, adequate ventilation is required during warming-up.

Lubricating operation

1. Slowly extend and retract each cylinder several times and circulate the hydraulic oil in all operation circuits.
2. Also perform swing and traveling slowly to circulate the hydraulic oil.

3.15.7 TREATMENT AFTER LONG-TERM STORAGE

When starting to use the machine after a long-term suspension, perform the following treatments.

- Loosen the plugs of the travel reduction unit and swing reduction unit and remove the dust and water which deposited during the long-term storage.
- Lubricant gets deteriorated while the machine is not in use. Use extreme caution when starting to use the machine at the next time.
- Check the deterioration of the hydraulic hoses carefully after the long-term storage. Replace the deteriorated hoses.
- Wipe off the anti-rust oil from the cylinder rods.
- Refill oil and grease to all necessary parts.
- Check the engine oil level and coolant level before starting the engine. Refill engine oil or coolant if its level is low.
- After starting the engine, fully warm-up the machine and repeat the traveling, swing and digging operations several times to prevent hydraulic oil film shortage.
- If the machine is stored indoors, adequate ventilation is required during warming-up.

Copyright©2022 Kobelco Construction Machinery Co.,Ltd. All rights reserved. [S2LC00054ZE11] [0609CsCshWbYs]

4. INSPECTION AND MAINTENANCE

Copyright©2022 Kobelco Construction Machinery Co.,Ltd. All rights reserved. [S2LC00054ZE11] [0609CsCshWbYs]

Copyright©2022 Kobelco Construction Machinery Co.,Ltd. All rights reserved. [S2LC00054ZE11] [0609CsCshWbYs]

4.1 GENERAL

WARNING INSPECTION AND MAINTENANCE ON THE MACHINE

Thoroughly read and understand the safety precautions contained in this manual before performing any inspection or service procedures on systems or components of this machine.

- Regular inspection and maintenance enable this machine to achieve the full function and extend the service life of each part.
- The information contained in this chapter gives the proper procedures for performing inspection and maintenance of this machine. Use these procedures when performing inspection and maintenance as they will guide the technician step by step for each procedure. Also, see "INSPECTION AND MAINTENANCE CHART" for general service interval recommendations.
- As a general rule, the period of the lubrication and maintenance is determined by the hour meter. If the hour meter reading matches roughly with the calendar day, and if you would like to schedule them based on the calendar day, take whichever comes first. For items which do not have a certain service time, see "WHEN REQUIRED".

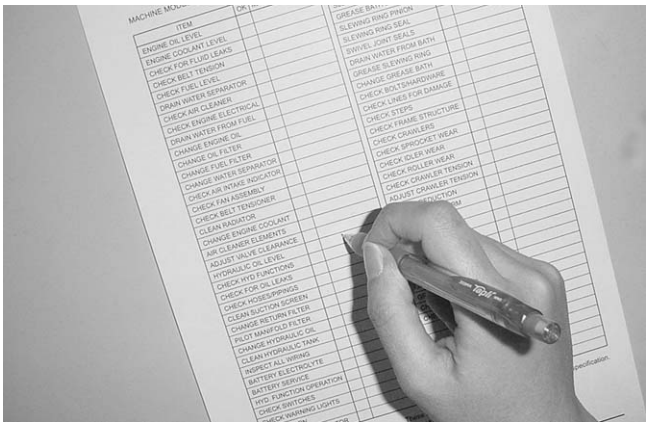



Notice

As a general rule, the period of the lubrication and maintenance is determined by the hour meter. If the hour meter reading matches roughly with the calendar day, and if you would like to schedule them based on the calendar day, take whichever comes first. For items which do not have a certain service time, see "WHEN REQUIRED".

- Use only specified oils, fluids, lubricants, filters and replacement parts to keep machine in optimum operating condition. Use the oils and greases with the specified viscosity depending on the ambient temperature. Store containers of oils, fluids and grease indoors in an appropriate location. To prevent dust and water intrusion, keep the containers of oil, fluid, and lubricant in a proper indoor place.

Copyright©2022 Kobelco Construction Machinery Co.,Ltd. All rights reserved. [S2LC00054ZE11] [0609CsCshWbYs]

4.2 INSPECTING AND MAINTAINING MACHINE

4.2.1 PERIODIC INSPECTION AND MAINTENANCE

Regular inspection and maintenance enable this machine to achieve the full function and extend the service life of each part. Inspection and maintenance schedules are given in both the calendar time and the operation time. Take either schedule whichever comes first. For items which do not have a certain service time, see "WHEN REQUIRED". Also, operation in sites under severe work conditions or with a lot of dust and moisture may need more frequent lubrication and maintenance than the service times specified there.

4.2.2 PRECAUTIONS OF INSPECTION AND MAINTENANCE

Use inspection and maintenance procedures described in this manual. Park the machine on a level and firm ground before inspection and maintenance.

Notice

For the adjustment, disassembling and repair of the engine, reduction unit, hydraulic component and electronic devices (controller, etc.), contact your KOBECO authorized dealer.

STOP THE ENGINE BEFORE INSPECTION AND MAINTENANCE

Be sure to stop the engine before inspection and maintenance of the engine. Inspecting and maintaining the running engine may cause injury by being caught in the cooling fan or fan belts. When running the engine is unavoidable during the inspection or maintenance, it should be done by at least two persons with the condition that one person can stop the engine at any time and they are communicating with each other.

PUT THE WARNING TAGS

Put the tags "DO NOT START ENGINE!", "DO NOT OPERATE" and "UNDER INSPECTION/MAINTENANCE" on noticeable places such as around the operator's seat as well as the starter switch or control levers before inspection and maintenance.

USE OUR GENUINE PARTS

- For replacement of parts, grease and oil, be sure to use KOBELCO genuine parts. Use grease and oil with the specified viscosity depending on the ambient temperature.
- Store containers of greases and oils in a clean room to keep them away from dust and water.

KEEP OUT DUST

Attach a plug or cap to the lubrication hole of a removed hydraulic hose or hydraulic component to keep out foreign materials.

INSPECT DRAIN OIL AND FILTERS

When replacing oil or filter, check the drain oil or old filter for metallic powder or other foreign materials mixed. Contact the person in charge and take appropriate measures if any foreign materials are found.

HANDLING OF WASTE OIL AND ANTIFREEZE

Be sure to drain waste oil and antifreeze in containers and ask a public service company for disposal of them as the industrial waste.

CLEAN THE SEALING SURFACE

After removing the O-ring or gasket seal, clean the sealing surface to replace it with a new one.
Apply thin oil to the O-ring or seal and attach it into the groove correctly.

DO NOT MIX OILS

Never mix different kinds of oil. When using another kind of oil, replace the total amount of old oil.

Copyright©2022 Kobelco Construction Machinery Co.,Ltd. All rights reserved. [S2LC00054ZE11] [0609CsCshWbYs]

4.3 LUBRICANT, FUEL & COOLANT SPECIFICATIONS

Regardless of the outdoor temperature, the following reduction units use the following oil:

- Swing reduction unit: Gear oil #90, API classification GL-4 class
- Travel reduction unit: Gear oil #90, API classification GL-4 class

Components	Type of Lubricant	Capacities (When changed)	Climete Zone -22 -4 14 32 50 68 86 104 ˚F -30 -20 -10 0 10 20 30 40 ˚C	Specified Lubricant
Hydraulic oil tank	Hydraulic oil	245 Liters (65 Gal) 410 Liters (108 Gal) 〔Hydraulic system〕	ISO VG46	(KOBELCO BRAND) Long life hydraulic oil KW5046 (20 L) P/No. KAPYN01T01066D3
Engine oil pan	Engine oil	[Total volume] 28.5 Liters (7.5 Gal) [H level] 26.0 Liters (6.9 Gal) [L level] 20.0 Liters (5.3 Gal)	SAE 10W-30 SAE 15W-40	（KOBELCO BRAND） JASODH-1 P/No. KAPYN01T01053D1 (20 L) （KOBELCO BRAND） JASODH-1 P/No. KAPYN01T01053D3 (20 L)
Swing motor reduction unit Travel motor reduction unit	Gear oil	7.4 Liter (2.0 Gal) 8.0 Liter X 2 (2.1 Gal X 2)	EXTREME GEAR OIL SAE #90	(KOBELCO BRAND) A.P.I classification for "service GL-4" P/No. KAPSP90020
Swing motor reduction unit (Housing)	EP grease	1.7 kg (3.7 lbs)	EP GREASE	(KOBELCO BRAND) Extreme pressure multipurpose grease Cartridge P/No. KAPG0420D1 (400g x 20 units) Pail can P/No. KAPG1601D1
Attachment pins		16 places	EP GREASE	
Slewing ring gear		1 place	EP GREASE	
Track tension Adjustment		2 places	EP GREASE	
Operating lever (Pilot valve)		As required	EP GREASE	
Swing gear		20.6 kg (45.4 lbs)	EP GREASE	
Fuel tank	Diesel fuel	503 Liters (132.9 Gal)	No.2 No.2 No.1	ASTM D-975 EN 590
Radiator (Reserve tank)	Engine coolant (Antifreeze)	13.4 L 〔Total volume 32 L〕	50% Mixture	(KOBELCO BRAND) 〔Do not mix and use different types of coolants.〕 P/No. KAPYN01T01110D1

Copyright©2022 Kobelco Construction Machinery Co.,Ltd. All rights reserved. [S2LC00054ZE11] [0609CsCshWbYs]

Notice

- When oil leakage or damage of the lower roller, upper roller and front idler is recognized, contact your KOBELCO authorized dealer for repair.
- Be sure to use light oil as fuel, which meets the standard of each country. To achieve a good fuel efficiency and exhaust gas property, the engine of this machine uses the electronically controlled fuel injector.
  Because this device requires high parts precision and high lubricating ability, when low viscosity fuel with low lubricating ability is used, the durability may decrease significantly.

Notice

When replacing and refilling the long life hydraulic oil, use the oil specified by KOBELCO.
When non-specified hydraulic oil is used or mixed, the performance decreases and the replacement interval of hydraulic oil needs to be shortened.

Copyright©2022 Kobelco Construction Machinery Co.,Ltd. All rights reserved. [S2LC00054ZE11] [0609CsCshWbYs]

4.4 ABOUT USE OF BIO-OIL (BIODEGRADABLE HYDRAULIC OIL)

4.4.1 GREASE AND OIL FOR USE

Regarding greases and oils for use, ask your KOBELCO authorized dealer.

4.4.2 PRECAUTIONS FOR BIO-OIL

- When changing mineral based hydraulic oil to bio-oil, perform flushing three times. Without flushing, the mineral oil in the circuit is not completely cleaned and the effect of biodegradability cannot be expected.
- Because the friction coefficient of bio-oil is smaller than that of mineral oil, the performance of parking brakes for swing and travel decrease.

4.4.3 REPLACEMENT INTERVAL OF BIO-OIL

Bio-oil should be replaced every 2,000 hours.
For replacing procedures, see ”CHANGING HYDRAULIC OIL" in Chapter 4.

4.4.4 FLUSHING PROCEDURES OF BIO-OIL

1. Drain all mineral oil from the hydraulic oil tank.
2. Drain all mineral oil from the cylinders.
3. Fill with new bio-oil in the hydraulic oil tank fully.
4. After starting the engine, operate each cylinder for 10 strokes respectively.

⚠CAUTION

Rapid operation may burn the seal because of the air remained in the cylinder. During the first 4 strokes, operate the cylinder slowly with the engine speed at low idle to charge the hydraulic oil in the cylinder.

5. Idle the right and left travel motors for about 3 minutes respectively.
6. Perform the swing operation for 10 turns.
7. Drain all bio-oil from the hydraulic oil tank.
8. Drain all bio-oil from each cylinder.
9. Fill with new bio-oil in the hydraulic oil tank and repeat the procedures 4 to 9 twice.
10. In the final state, analyze the hydraulic oil and check the remaining amount of mineral oil.

Copyright©2022 Kobelco Construction Machinery Co.,Ltd. All rights reserved. [S2LC00054ZE11] [0609CsCshWbYs]

4.5 MAINTENANCE PARTS

Replace parts, such as filters and elements, during the periodical maintenance or before the end of the service life.
The machine can be used economically if the maintenance parts are changed properly and timely.
When you place an order of parts, confirm the parts number on the parts manual.

MAINTENANCE PARTS LIST

Item		Part Number	Part Name	Q'ty	Replacement Interval
Hydraulic oil tank		LC52V01004R100	Return filter element kit (STD, Breaker)	1	Replace at 50 hours for the first time, then every 1000 hours (every 250 hours with breaker specification)
		(ZD11G19000)	(O-ring)	1	
Hydraulic oil tank		LC50V00006F2	Suction strainer	1	Clean every 2000 hours
		(ZD11G22000)	(O-ring)	1	
Air breather		YN57V00010S002	Element	1	Replace every 1000 hours. Replacement every 1000 hours is just a rough guideline. If the machine is operated in very dusty conditions, replace the element earlier.
Air cleaner		LC11P00018S003	Element (Outer)	1	Replace every 6 times cleaning or every 1 year
		LC11P00018S002	Element (Inner)	1	Replace at the same time with the outer element (do not clean)
Engine oil filter		VHS156072190	Cartridge	1	Replace at 50 hours for the first time, then every 500 hours
Fuel filter	Main	VH23414E0020	Cartridge	1	Replace every 500 hours
	Pre	YN21P01157R100	Cartridge	1	
Air conditioner		LQ50V01009P1	Fresh air filter	1	Replace after 10 times cleaning. When clogging is severe, clean or replace the filter.
		LQ50V01007P1	Recirculation air filter	1	
Pilot line filter		YN50V00020F1	Pilot line filter	1	Clean every 2000 hours
Radiator		YN05P00088S032	Radiator cap	1	Replace every 1000 hours
Built-in battery for communication controller		YN22E00643S001	Battery	1	Replace every year

IMPORTANT

- Parts enclosed in parenthesis ( ) should be changed at the same time.
- The built-in battery for communication controller needs to be replaced every year. For replacement, contact your KOBELCO authorized dealer.

Copyright©2022 Kobelco Construction Machinery Co.,Ltd. All rights reserved. [S2LC00054ZE11] [0609CsCshWbYs]

4.6 TIGHTENING TORQUES FOR BOLTS & NUTS (SPECIFIC POSITIONS)

Follow the next table when tightening or retightening bolts or nuts in every part.
Check for any loose or missing bolts or nuts before daily operation and at periodical inspection. Retighten a loose bolts and nuts and supply new parts for missing ones as required.
Inspection and retightening are needed at first 50 hours for a new machine and after that every 250 hours. Except for the retightening positions indicated in the following table, retighten the bolts and nuts according to the tightening torque table in "TIGHTENING TORQUE FOR BOLTS & NUTS" in Chapter 4.

Size (M)	Width across Flats mm	Position of bolts/nuts	Tightening torque N·m (Without Lubrication)	Recommended thread locking agent
M5	—	Installing fuel tank level sensor	1.96±0.2	
M8	13	Installing condenser	9.9 to 12.1	
	13	Installing water sub-tank	26.5±3.0	
	13	Condenser mounting bracket	23±2.3	
M10	17	Installing swivel joint dust cover	14.7±1.5	Applying Loctite #572
	17	Installing swing bearing access panel cover	29.4±2.9	Applying Loctite #572
	17	Installing floor plate rubber mount	46.5±4.6	
	17	Installing air cleaner	39.2±3.9	Applying Loctite #262
	17	Installing engine oil filter	46.1±4.9	Applying Loctite #262
	17	Installing bracket for power take	64.7±6.4	Applying Loctite #262
	17	Installing hydraulic oil tank cover	46.5±4.6	
	17	Installing fuel tank bottom cover	46.5±4.6	
	17	Installing lower frame grease bath cover	10.8±0.98	
M12	19	Installing engine	115±12	Applying Loctite #262
	19	Installing swivel joint	107.8±10.8	Applying Loctite #262
	19	Installing cab	80±8	
	19	Installing travel motor cover	83.4±8.4	Applying Loctite #262
M16	24	Floor plate rubber mount mounting nut	191±19	
	24	Installing cab nut	191±19	
M18	32	Installing lower roller	731±74	Applying Loctite #262
	27	Installing engine	225.6±22.6	Applying Loctite #271
M20	30	Installing hydraulic oil tank	370±37	Applying Loctite #262
	30	Installing upper roller	539±54	Applying Loctite #262
	17	Installing power take-off coupling	465	
	17	Installing main pump	431±43.1	Applying Loctite #262
	30	Installing sprocket	539±54	Applying Loctite #262
	17	Front idler idler adjuster connection	540±54	Applying Loctite #262
M22	32	Installing shoe bolts	1.18 kNm	

Copyright©2022 Kobelco Construction Machinery Co.,Ltd. All rights reserved. [S2LC00054ZE11] [0609CsCshWbYs]

Size (M)	Width across Flats mm	Position of bolts/nuts	Tightening torque N·m (Without Lubrication)	Recommended thread locking agent
M24	35	Installing swing bearing (outer race)	932±93	Applying Loctite #262
	36	Installing swing bearing (inner race)	932±93	Applying Loctite #262
	36	Installing swing reduction unit	932±93	Applying Loctite #262
	36	Installing travel motor	932±93	Applying Loctite #262
	36	Installing fuel tank	500±50	Applying Loctite #262
M36	55	Installing counterweight	3.13±0.31 kNm	Applying Loctite #262
5/8-18UNF	19	Installing idler adjuster grease nipple	58.8±9.8	

⚠CAUTION

The counterweight mounting bolts may become loose when the counterweight is hit against some soild obstacles during swing operation etc.
Check that the mounting bolts are tightened to the specified torque using a torque wrench.
When loosened, tighten the bolt to the specified torque.

Copyright©2022 Kobelco Construction Machinery Co.,Ltd. All rights reserved. [S2LC00054ZE11] [0609CsCshWbYs]

4.7 TIGHTENING TORQUES FOR CAPSCREWS AND NUTS

Tables Table "Metric coarse thread (Not plated)" and Table "Metric fine thread (Not plated)" indicate tightening torques applicable to cases where no special note is given.
Overtightening of bolts may result in a twist-off and a fracture under load.
Insufficient tightening may lead to a loosening or loss of bolts. Always tighten bolts to proper torques.

Tightening torque for metric coarse threads (not plated)

Unit : N·m (lbf·ft)

Size	Strength classification	4.8T		7T		10.9T	
	Use classification	No lubrication	Oil lubrication	No lubrication	Oil lubrication	No lubrication	Oil lubrication
M6	P=1	4.4±0.4 (3.2±0.3)	3.7±0.4 (2.7±0.3)	9.7±1.0 (7.2±0.7)	8.1±0.8 (6.0±0.6)	17.4±1.7 (12.8±1.3)	14.7±1.5 (10.8±1.1)
M8	P=1.25	10.7±1.1 (7.9±0.8)	9.0±0.9 (6.6±0.7)	23±2.3 (17.0±1.7)	19.6±1.9 (14.5±1.4)	42±4.2 (31.0±3.1)	35±3.5 (25.8±2.6)
M10	P=1.5	21.5±2.1 (15.9±1.5)	18±1.8 (13.3±1.3)	46.5±4.6 (34.3±3.4)	39±3.9 (28.8±2.9)	84±8.4 (62.0±6.2)	70±7.0 (51.6±5.2)
M12	P=1.75	36.5±3.7 (26.9±2.7)	31±3.1 (22.9±2.3)	80±8.0 (59.0±5.9)	67±6.7 (49.4±4.9)	144±14 (106±10)	121±12 (89.2±8.9)
M14	P=2	58±5.8 (42.8±4.3)	49±4.9 (36.1±3.6)	126±13 (92.9±9.6)	106±11 (78.2±7.4)	230±23 (170±17)	192±19 (142±14)
M16	P=2	88±8.8 (64.9±6.5)	74±7.4 (54.6±5.5)	191±19 (141±14)	161±16 (119±12)	345±34 (254±25)	290±29 (214±21)
M18	P=2.5	122±12 (90.0±8.9)	103±10 (75.8±7.2)	265±26 (195±19)	225±22 (166±16)	480±48 (354±35)	400±40 (295±30)
M20	P=2.5	171±17 (126±13)	144±14 (106±10)	370±37 (293±27)	310±31 (228±23)	670±67 (494±49)	560±56 (413±41)
M22	P=2.5	230±23 (170±17)	192±19 (142±14)	500±50 (369±37)	420±42 (310±31)	900±90 (664±66)	755±75 (557±55)
M24	P=3	295±29 (218±21)	245±25 (181±18)	640±64 (472±47)	540±54 (398±40)	1150±115 (848±85)	970±97 (715±72)
M27	P=3	435±43 (321±32)	365±36 (269±26.6)	940±94 (693±69)	790±79 (583±58)	1700±170 (1250±125)	1420±142 (1047±105)
M30	P=3.5	590±59 (435±44)	495±49 (365±36)	1280±128 (994±94)	1080±108 (797±80)	2310±231 (1704±170)	1940±194 (1430±143)
M33	P=3.5	795±79 (586±58)	665±66 (491±49)	1730±173 (1276±128)	1450±145 (1070±107)	3110±311 (2290±229)	2600±260 (1918±192)
M36	P=4	1020±102 (752±75)	860±86 (634±63)	2230±223 (1645±164)	1870±187 (1379±138)	4010±401 (2960±296)	3360±336 (2480±248)

Copyright©2022 Kobelco Construction Machinery Co.,Ltd. All rights reserved. [S2LC00054ZE11] [0609CsCshWbYs]

Tightening torques for metric fine threads (not plated)

Unit : N·m (lbf·ft)

Size	Strength classification	4.8T		7T		10.9T	
	Use classification	No lubrication	Oil lubrication	No lubrication	Oil lubrication	No lubrication	Oil lubrication
M8	P=1	11.3±1.1 (8.3±0.8)	9.5±0.9 (7.0±0.7)	24.5±2.4 (18.1±1.8)	20.5±2.1 (15.1±1.5)	44±4.4 (32.5±3.2)	37±3.7 (27.3±2.7)
M10	P=1.25	22.5±2.2 (16.6±1.6)	18.7±1.9 (13.8±1.4)	48.5±4.8 (35.8±3.5)	40.5±4.1 (29.9±3.0)	87±8.7 (64.2±6.4)	73±7.3 (53.8±5.4)
M12	P=1.25	39.5±3.9 (29.1±2.9)	33±3.3 (24.3±2.4)	86±8.6 (63.4±6.3)	72±7.2 (53.1±5.3)	154±15 (114±11)	129±13 (95.2±9.6)
M16	P=1.5	93±9.3 (68.6±6.9)	77±7.7 (56.8±5.7)	200±20 (148±15)	168±17 (124±13)	365±36 (269±27)	305±30 (225±22)
M20	P=1.5	186±19 (137±14)	155±15 (114±11)	405±40 (299±30)	335±34 (247±25)	725±73 (535±54)	605±60 (446±44)
M24	P=2	315±32 (232±24)	265±26 (195±19)	685±69 (505±51)	575±57 (424±42)	1240±124 (915±91)	1030±103 (760±76)
M30	P=2	640±64 (472±47)	530±53 (391±39)	1390±139 (1030±103)	1160±116 (856±86)	2500±250 (1840±184)	2080±208 (1530±153)
M33	P=2	850±85 (627±63)	710±71 (524±52)	1860±186 (1370±137)	1550±155 (1140±114)	3350±335 (2470±247)	2780±278 (2051±205)
M36	P=3	1070±107 (789±79)	890±89 (656±66)	2330±233 (1720±172)	1940±194 (1430±143)	4200±420 (3100±310)	3500±350 (2580±258)

Copyright©2022 Kobelco Construction Machinery Co.,Ltd. All rights reserved. [S2LC00054ZE11] [0609CsCshWbYs]

4.8 TIGHTENING TORQUES FOR JOINTS & HYDRAULIC HOSES

IMPORTANT

These tightening torques are available in the case of tightening without lubricant.

ORS FITTING (O-RING SEAL TYPE)

Hose Mouth and Fitting Size	Wrench (mm)	Tightening torque N·m {lbt·ft}
1 to 14 UNS	30	137 ± 14 {101 ± 10}
	32	
1 to 3/16 to 12 UN	36	177 ± 18 {130 ± 13}
	41	206 ± 21 {152 ± 15}
1 to 7/16 to 12 UN	41	206 ± 21 {152 ± 15}
	46	

BYTE TYPE TUBE FITTING

Tube size O.D. x Thickness (mm)	Wrench (mm)	Tightening torque N·m {lbt·ft}
10 * 1.5	19	49 ± 9.8 {36 ± 7}
15 * 2.0	27	118 ± 12 {87 ± 9}
18 * 2.5	32	147 ± 15 {108 ± 18}
22 * 3.0	36	216 ± 22 {159 ± 16}
28 * 4.0	41	275 ± 27 {202 ± 20}
35 * 5.0	55	441 ± 44 {325 ± 33}

O-RING FITTING

Screw diameter (PF)	Wrench (mm)	Tightening torque N·m {lbt·ft}
1/8	14	17 ± 2 {12.5 ± 1.5}
1/4	19	36 ± 2 {27 ± 1.5}
3/8	22	74 ± 5 {54 ± 4}
1/2	27	108 ± 9.8 {80 ± 7}
3/4	36	162 ± 9.8 {119 ± 7}
1	41	255 ± 9.8 {188 ± 7}
1 to 1/4	50	392 ± 40 {289 ± 30}
1 to 1/2	55	485 ± 49 {358 ± 36}

Copyright©2022 Kobelco Construction Machinery Co.,Ltd. All rights reserved. [S2LC00054ZE11] [0609CsCshWbYs]

HYDRAULIC HOSE

Screw diameter (PF)	Wrench (mm)	Tightening torque N·m {lbt·ft}
1/8	17	15 ± 2.0 {11 ± 1.5}
1/4	19	29 ± 4.9 {22 ± 4}
3/8	22	49 ± 4.9 {36 ± 4}
1/2	27	78 ± 4.9 {58 ± 4}
3/4	36	118 ± 9.8 {87 ± 7}
1	41	137 ± 15 {101 ± 11}
1 to 1/4	50	167 ± 15 {123 ± 11}

SPLIT FLANGE

Nominal Size	Tightening torque N·m {lbt·ft}			
	Working pressure 20.6 Mpa {210 kg/cm²}	Bolt size (M)	Working pressure 41.2 Mpa {420 kg/cm²}	Bolt size (M)
3/4	33.9 ± 5.6 {25 ± 4.1}	10	39.5 ± 5.6 {29 ± 4.1}	10
1	42.4 ± 5.6 {31 ± 4.1}	10	62.2 ± 5.6 {46 ± 4.1}	12
1 to 1/4	55.1 ± 7.1 {41 ± 5.2}	10	93.3 ± 8.4 {69 ± 6.2}	14
1 to 1/2	70.6 ± 8.4 {52 ± 6.2}	12	169 ± 11 {125 ± 8.1}	16
2	81.9 ± 8.4 {60 ± 6.2}	12	282 ± 11 {208 ± 8.1}	20

IMPORTANT

The tightening torques of the split flange are available in the case of tightening without lubricant.

Copyright©2022 Kobelco Construction Machinery Co.,Ltd. All rights reserved. [S2LC00054ZE11] [0609CsCshWbYs]

4.9 INSPECTION AND MAINTENANCE CHART

The following charts show the recommended interval or the hour meter reading for each device for greasing, element replacement, and inspection and maintenance items.
Perform inspection and maintenance according to the calendar time or operation time shown by the hour meter, whichever comes first.

Symbols in the Table

Indicates a required periodic inspection or maintenance with the hour meter interval.

◎ Indicates a first one time maintenance interval.

○ Indicates a inspection or maintenance interval.

ENGINE

Item/Interval		Irregular	Start-Up Inspection 8H	50H	Every 1 Month or 100H	Every 3 Months or 250H	Every 6 Months or 500H	Every 12 Months or 1,000H	2,000H	5,000H	Grease (Replacement Part)	Procedure Description Section
Engine oil	Checking oil level		○								Engine oil	3.2.2
	Replacement			◎ (First time)			○					4.15.1
Replacing oil filter				◎ (First time)			○				Cartridge	4.15.1
Fuel filter	Draining		○								Cartridge	3.2.4
	Replacement						○					4.15.3
Fuel pre-filter	Replacement						○				Cartridge	4.15.2
Checking air cleaner inlet			○									3.2.11
Air cleaner element	Inspection, cleaning		When the warning lamp is on (until 6 times)			○					Outer element (Inner element is not cleaned)	4.14.4
	Replacement		After 6 times of cleaning of outer element or after 1 year					○			Outer and inner elements	
Cleaning radiator coolant and cooling system	Checking water level		○									3.2.1
	Replacement, cleaning								○ (Or every 2 years)		LCC	4.17.1
Checking radiator hoses for cracking and damage						○						4.14.2
Cleaning radiator, oil cooler core, intercooler and filters		○										4.10.1
Fan belt and air conditioner belt	Inspection		○									3.2.6
	Adjustment			◎ (First time)		○						4.14.1
Cleaning or replacing radiator cap / reserve tank cap	Cleaning					○						4.14.5
	Replacement							○				
Checking engine mounting bracket for tightening condition								○				4.16.3
Checking intake system rubber hose					○ (120H)							4.13.3

Copyright©2022 Kobelco Construction Machinery Co.,Ltd. All rights reserved. [S2LC00054ZE11] [0609CsCshWbYs]

Item/Interval	Irregular	Start-Up Inspection **8H**	**50H**	Every 1 Month or **100H**	Every 3 Months or **250H**	Every 6 Months or **500H**	Every 12 Months or **1,000H**	**2,000H**	**5,000H**	Grease (Replacement Part)	Procedure Description Section
*Checking and adjusting valve clearance						○					—
*Checking and adjusting compression pressure							○				—
*Checking intake and exhaust manifolds for tightening condition			◎ (First time)				○				—
*Checking oil pan and other auxiliary devices for tightening condition			◎ (First time)				○				—
*Checking each tightening part of turbo charger			◎ (First time)	○ （120H）							—
*Checking turbo charger rotor and impeller for rotation condition					○						—
*Checking play of turbo charger rotor						○					—
*Checking lubricating system of turbo charger for leakage		○					○				—
*Checking and cleaning starter brush and commutator							○				—
*Checking oil pan for mixing of water and fuel				○							—
*Checking fan mounting bolt for tightening condition			○								—
*Checking thermostat function							○				—
*Checking starter function						○					—
*Checking startability, exhaust color, and abnormal sound		○									—
*Checking heater plug and intake air heater (starting auxiliary device)						○					—
*Checking alternator function							○				—
*Checking pipe joints for tightening condition				◎ (First time)			○				—
*Checking exhaust pipe and muffler for looseness of mounting part and damages				◎ (First time)			○				—
*Checking and cleaning alternator brush (when brush is equipped)							○				—
Checking each part for oil and fuel leakage		○									3.1
Checking each part for water leakage		○									3.1
Checking electrical system		○									—

Notice

Contact your KOBELCO authorized dealer for inspection and adjustment of the items marked with *.

Copyright©2022 Kobelco Construction Machinery Co.,Ltd. All rights reserved. [S2LC00054ZE11] [0609CsCshWbYs]

FUEL SYSTEM

Item/Interval		Irregular	Start-Up Inspection 8H	50H	Every 1 Month or 100H	Every 3 Months or 250H	Every 6 Months or 500H	Every 12 Months or 1,000H	2,000H	5,000H	Grease (Replacement Part)	Procedure Description Section
Fuel tank	Checking oil level		○									3.2.3
	Draining water and sediment			○								4.12.2
	Cleaning cap and strainer						○					4.15.6
Bleeding air from fuel piping		○										4.10.7

HYDRAULIC SYSTEM

Item/Interval			Irregular	Start-Up Inspection 8H	50H	Every 1 Month or 100H	Every 3 Months or 250H	Every 6 Months or 500H	Every 12 Months or 1,000H	2,000H	5,000H	Grease (Replacement Part)	Procedure Description Section
Hydraulic oil tank	Hydraulic oil	Checking oil level		○								Hydraulic oil	3.2.5
		Replacement							○ (Breaker)		○		4.18.1
	Suction strainer	Cleaning								○		Strainer	4.17.4
	Replacing return filter				◎ (First time)		○ (Breaker)		○			Element	4.16.1
	Replacing air breather element								○			Element	4.16.2
Checking hydraulic components, pipes and hoses for oil leakage and damage				○									3.1
Cleaning pilot line filter										○			4.17.7

UPPER FRAME

Item/Interval		Irregular	Start-Up Inspection 8H	50H	Every 1 Month or 100H	Every 3 Months or 250H	Every 6 Months or 500H	Every 12 Months or 1,000H	2,000H	5,000H	Grease (Replacement Part)	Procedure Description Section
Swing reduction unit oil	Checking oil level				○ (120H)						Gear oil SAE #90 GL-4	4.13.1
	Replacement						◎ (First time)		○			4.17.2
Greasing to swing bearing							○				EPG lithium added extreme-pressure grease	4.15.4
Checking grease of swing grease bath									○		EPG lithium added extreme-pressure grease	4.17.6
Swing brake function			○									—
Greasing to control lever push rod and universal joint part							○				EPG lithium added extreme-pressure grease	4.15.7
Installing swing bearing Checking bolt for looseness							○					4.15.5
Installing counterweight Checking bolt for looseness				◎ (First time)		○						4.6
Greasing swing reduction unit									○			4.17.5

Copyright©2022 Kobelco Construction Machinery Co.,Ltd. All rights reserved. [S2LC00054ZE11] [0609CsCshWbYs]

LOWER FRAME

Item/Interval		Irregular	Start-Up Inspection 8H	50H	Every 1 Month or 100H	Every 3 Months or 250H	Every 6 Months or 500H	Every 12 Months or 1,000H	2,000H	5,000H	Grease (Replacement Part)	Procedure Description Section
Travel reduction unit oil	Checking oil level				○ (120H)						Gear oil SAE #90 GL-4	4.13.2
	Replacement						◎ (First time)		○			4.17.3
Adjusting tension of crawler				○								4.12.3
Checking upper roller and lower roller for oil leakage			○									3.1
Checking idler and travel reduction unit for oil leakage			○									3.1
Checking sprocket, idler, and roller for wear			○									3.1

ATTACHMENT

Item/Interval	Irregular	Start-Up Inspection 8H	50H	Every 1 Month or 100H	Every 3 Months or 250H	Every 6 Months or 500H	Every 12 Months or 1,000H	2,000H	5,000H	Grease (Replacement Part)	Procedure Description Section
Greasing attachment		○ (Until 50H)	○							EPG lithium added extreme-pressure grease	4.11.1
Replacing bucket	○										4.10.4
Replacing tooth and side cutter	○										4.10.5
Checking attachment structure		○									—

ELECTRICITY

Item/Interval		Irregular	Start-Up Inspection 8H	50H	Every 1 Month or 100H	Every 3 Months or 250H	Every 6 Months or 500H	Every 12 Months or 1,000H	2,000H	5,000H	Grease (Replacement Part)	Procedure Description Section
Battery	Checking liquid level			○								4.12.1
	Measuring specific gravity			○								4.12.1
	Cleaning and grease application			○								4.12.1
	Measuring voltage							○				4.16.4
Electrical wiring			○									3.1
Check instruments, switches, and light warning devices for performance condition			○									—

Copyright©2022 Kobelco Construction Machinery Co.,Ltd. All rights reserved. [S2LC00054ZE11] [0609CsCshWbYs]

OTHER DEVICES

Item/Interval			Irregular	Start-Up Inspection 8H	50H	Every 1 Month or 100H	Every 3 Months or 250H	Every 6 Months or 500H	Every 12 Months or 1,000H	2,000H	5,000H	Grease (Replacement Part)	Procedure Description Section
Air conditioner	Checking refrigerant volume							○					4.15.8
	Checking and cleaning condenser		○										4.10.1
	Filter	Cleaning					○						4.14.3
		Replacement			After about 10 times of cleaning								
Checking wiper blades			○										4.10.2
Checking washer fluid			○										4.10.3
Checking external appearance of machine for deformation and damages				○									3.1
Checking bolts and nuts for looseness and coming off				○									4.7
Seatbelt		Inspection		○									2.11
		Replacement									○ (3 years)		

4

Copyright©2022 Kobelco Construction Machinery Co.,Ltd. All rights reserved. [S2LC00054ZE11] [0609CsCshWbYs]

4.10 MAINTENANCE WHEN REQUIRED

Thoroughly read and understand "SAFETY PRECAUTIONS" of this manual before operating, inspecting or maintaining the machine.

4.10.1 CLEANING RADIATOR, OIL COOLER CORE AND SCREEN

WARNING PRECAUTIONS FOR HANDLING

Direct strike of compressed air, steam or high pressure water to your body can cause personal injury. Wear protective glasses, goggles, mask, and protective shoes, etc.

Notice

When using compressed air or high pressure water, keep a safe distance from the fin to prevent it from being damaged. If the fin is damaged, it may cause water leakage or overheating.

1. Use the starter key to open the engine hood and the side door at the left side of the machine and hold them with the stays.
2. Remove cover (1) under the radiator.

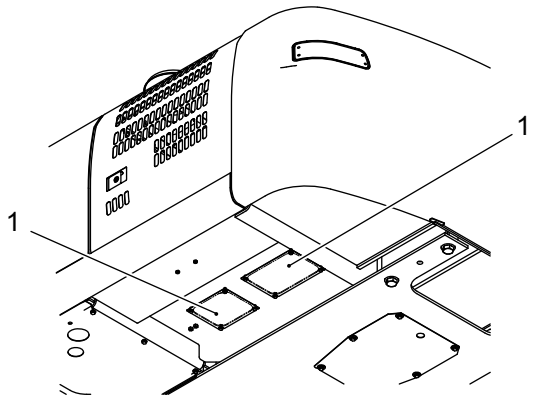

Copyright©2022 Kobelco Construction Machinery Co.,Ltd. All rights reserved. [S2LC00054ZE11] [0609CsCshWbYs]

3. Loosen wing bolt (6) on the radiator at the front of the oil cooler and the radiator and pull screen (5) out.
4. Clean screen (5) with compressed air (0.2 MPa or less) or soft clean water.
5. Check radiator (2), oil cooler (3), intercooler (4), and condenser (7) for mud, dust, or leaves and if any of them are adhered, clean them.
6. Insert screen (5) into the original position, and install it with wing bolt (6).
7. Attach cover (1) under the radiator.
8. Remove the support stays and close the side door and engine hood.

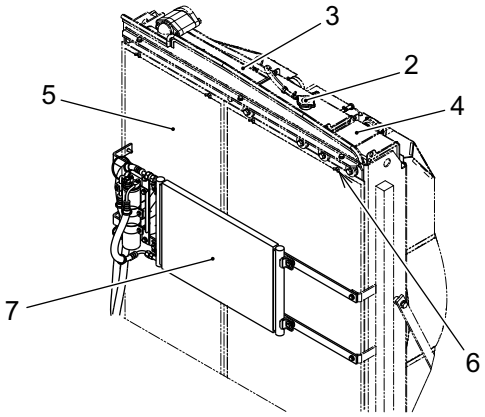

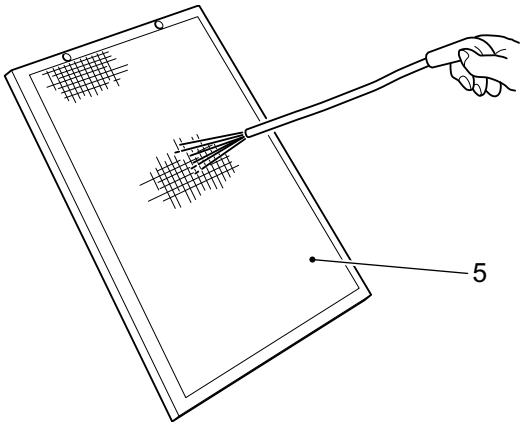

4.10.2 CHECKING AND REPLACING WIPER BLADES

- Check the wiper blades and replace them if there is wear or damage.

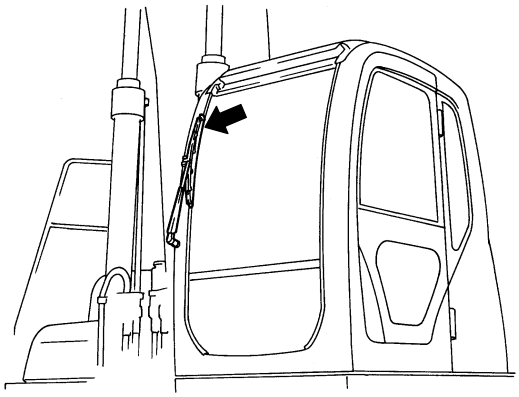

Copyright©2022 Kobelco Construction Machinery Co.,Ltd. All rights reserved. [S2LC00054ZE11] [0609CsCshWbYs]

4.10.3 WASHER FLUID INSPECTION

Notice

If the washer is used when the washer tank is empty, the motor attached to the washer tank may be damaged.

1. Remove the floor mat.
2. Inspect the fluid level of washer tank (1).
3. If the washer fluid level is low, remove the cap, and add washer fluid for automobiles.
4. Put the floor mat back to its original position.

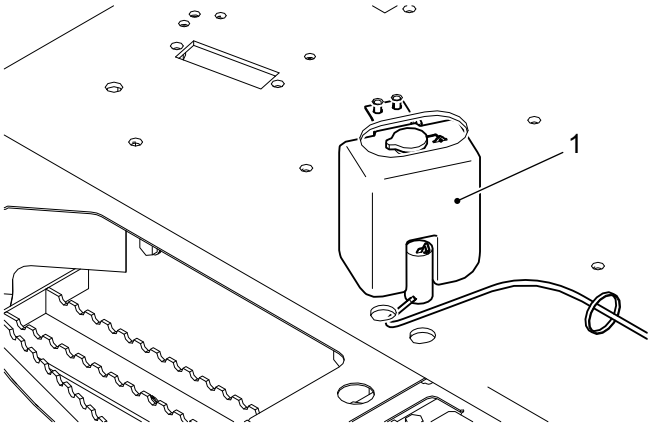

Copyright©2022 Kobelco Construction Machinery Co.,Ltd. All rights reserved. [S2LC00054ZE11] [0609CsCshWbYs]

4.10.4 REPLACING BUCKET

⚠CAUTION

- Park the machine on a level and firm place before operation. When working with other workers, surely send and receive signals to each other and use extreme caution to ensure the safety.
- Never operate the front attachment abruptly because it is dangerous.
- When aligning the pin with a pin hole, never insert your fingers into the hole.
- Place the removed bucket in the stable condition.

REMOVING BUCKET

1. Put the bucket bottom on a level ground and stabilize it at the position where the load is not applied on the pins of bucket and arm.
2. Move O-ring (1) from the specified position to bucket boss (9).

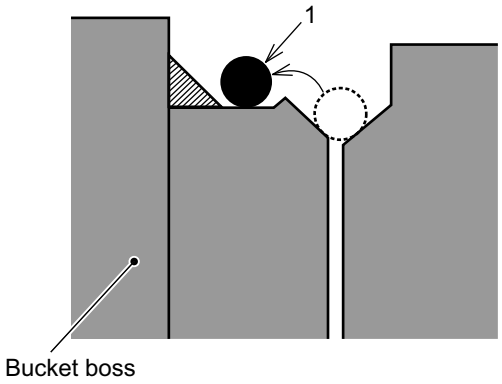

3. Remove retaining ring (2) and pin (3) by using a flat-head screwdriver.
4. Remove pins (4) and (5) and bucket (6).
   Use caution to prevent sand or mud from sticking to the removed pin. The both ends of pin holes of arm (7) and bucket link (8) have the dust seals. Be careful not to damage them.

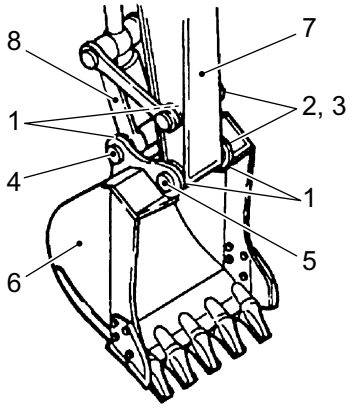

Copyright©2022 Kobelco Construction Machinery Co.,Ltd. All rights reserved. [S2LC00054ZE11] [0609CsCshWbYs]

INSTALLING BUCKET

Notice

If O-ring (1) is cracked or has lost elasticity, replace it with a new one.

1. Clean each pin and pin hole and grease it sufficiently to make it slippery.
2. Move the bucket cylinder to align the pin holes of bucket (6) and bucket link (8) with each other, and then insert pin (4).
3. Raise the boom to slightly raise the bucket from the ground.
4. Move arm (7) to align the pin holes of bucket (6) and arm (7) with each other, and then insert pin (5).
5. Insert pin (3) and install retaining ring (2).
6. Fit O-ring (1) in place.
7. Apply grease to the grease nipples for each pin until the grease comes out through the gap between the pin and the hole.

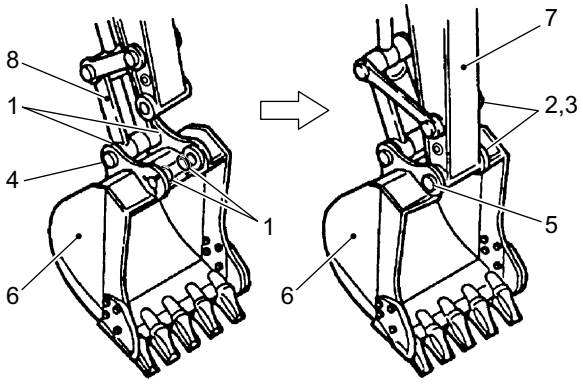

Copyright©2022 Kobelco Construction Machinery Co.,Ltd. All rights reserved. [S2LC00054ZE11] [0609CsCshWbYs]

4.10.5 REPLACING TOOTH POINT AND SIDE CUTTER

⚠CAUTION

When replacing the tooth point or side cutter, apply a safety block to the bottom face of the bucket.

Check the bucket tooth points and side cutters for wear. The tooth point with holes or crackings should be replaced before adapter (1) begins to be worn. The side cutter with severe wear should be replaced soon after it is found. If the replacement is delayed, the body of the bucket will be damaged.

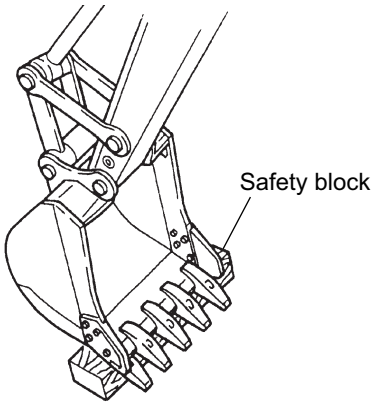

(1) Adapter
(2) Tooth point
(3) Rubber lock pin
(4) Locking pin
(5) Side cutter
(6) Bolt
(7) Nut

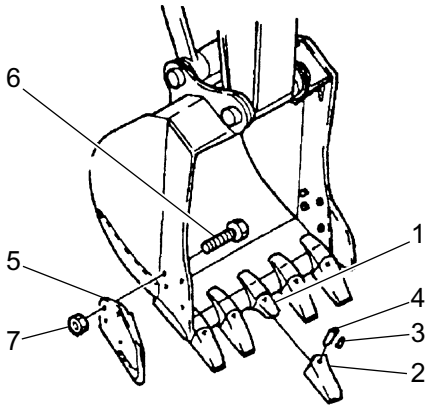

REPLACING TOOTH POINTS

⚠CAUTION

When hammering, metal chips can fly. If it flies into your eye, it may result in severe injury. Wear protective gears such as protective glasses, hard hat and gloves.

Copyright©2022 Kobelco Construction Machinery Co.,Ltd. All rights reserved. [S2LC00054ZE11] [0609CsCshWbYs]

1. Using a punching tool and hammer, hammer out locking pin (4) in a way that will not break rubber rock pin (3).
2. Inspect removed locking pin (4) and rubber lock pin (3).
   If the locking pin is too short or the rubber lock pin is in poor condition as shown in the figure, replace it with a new one.
3. Use a putty knife to clean the surface of adapter nose (1) and remove hardened soil.
4. Fit tooth point (2) onto adapter nose (1).
5. Push rubber lock pin (3) into the hole of adapter nose (1).
6. Hammer locking pin (4) until its surface is aligned with the point surface.

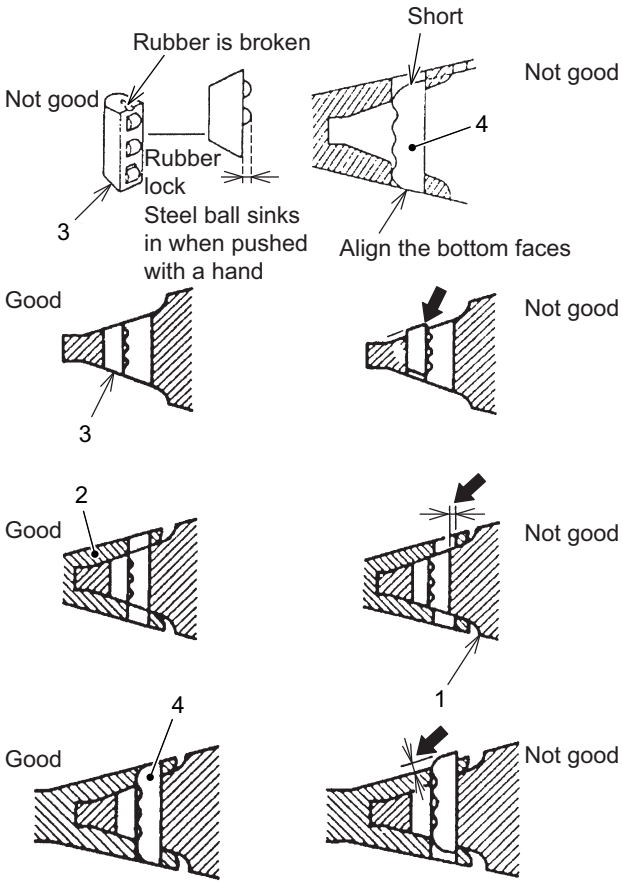

Copyright©2022 Kobelco Construction Machinery Co.,Ltd. All rights reserved. [S2LC00054ZE11] [0609CsCshWbYs]

REPLACING SIDE CUTTERS

Notice

If the replacement is delayed, the body of the bucket will be damaged.
Early replacement is recommended.

1. After removing sand and soil sticking to around the mounting bolts, cut off the mounting bolts by gas cutting, and then remove the side cutters.
2. Clean the mounting surfaces and install new side cutters.
   When replacing the side cutters, be sure to replace the bolts and nuts with new ones.
   Tightening Torque: 980 ± 50N·m (723 ± 37 lbf·ft)
3. After tightening the nuts, spot-weld them.

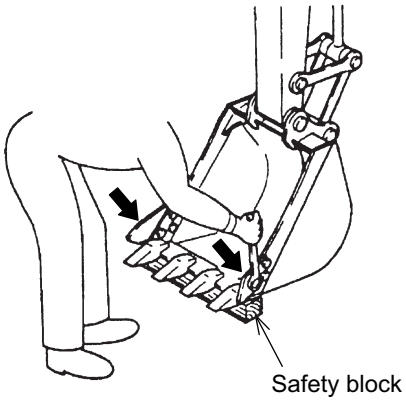

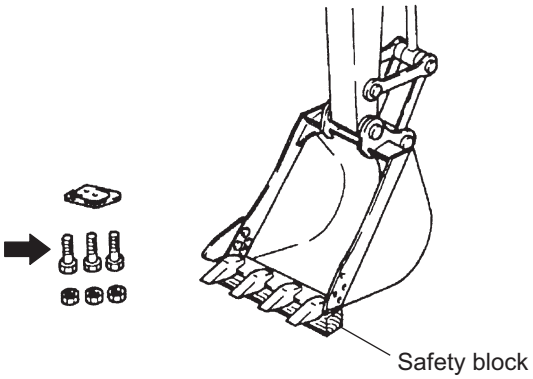

Copyright©2022 Kobelco Construction Machinery Co.,Ltd. All rights reserved. [S2LC00054ZE11] [0609CsCshWbYs]

4.10.6 INSPECTION AND ADJUSTMENT OF BUCKET GAP ADJUSTMENT MECHANISM

⚠CAUTION

- When adjusting bucket gaps, pull up the pilot control shut-off lever to the "LOCKED" position and stop the engine.
- If the bucket gaps are not properly adjusted, galling is generated in the contact surface between the bucket and the arm causing abnormal noise and damage on the shaft the O-ring.

1. Place the bucket as shown in the figure in stable condition.

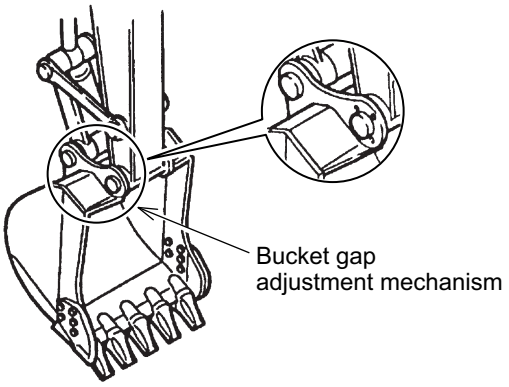

2. Move O-ring (1) from the specified position to the bucket boss.
3. Swing the upper structure right very slightly to press the tip of the arm to the right of the bucket lightly (the side without the gap adjustment system).
4. Move the pilot control shut-off lever to the "LOCKED" position, and then stop the engine.

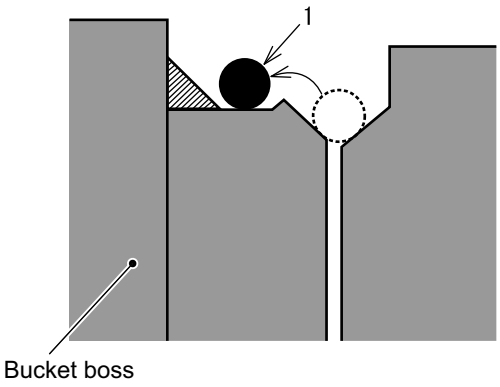

5. Measure gap (A) between the bucket and the arm boss.
   When the measurement value is 1.2 mm or more, adjust it.
6. Loosen each bolt, and remove appropriate number of shims to adjust the gap.
   There are 5 pieces of shims (3) (1 mm) in average in 3 bolts (2) on the gap adjustment part.
7. Tighten bolts (2) with the specified tightening torque evenly.
   Tightening Torque: 279 ± 29N·m (206 ± 21 lbf·ft)
8. Fit O-ring (1) in place.

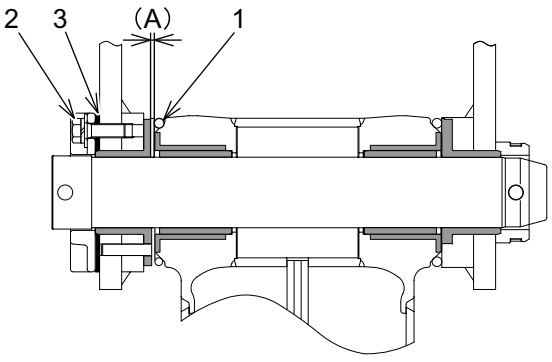

Copyright©2022 Kobelco Construction Machinery Co.,Ltd. All rights reserved. [S2LC00054ZE11] [0609CsCshWbYs]

4.10.7 BLEEDING AIR FROM FUEL PIPING

After replacing the element of fuel filter or running out of fuel, air enters the fuel piping and the engine cannot be started.
Use the following procedures to bleed air.

WARNING ABOUT BLEEDING AIR FROM FUEL PIPING

- Wipe off spilled fuel completely to prevent a fire.
- After the operation, make sure that fuel does not leak.

1. Place a container for fuel under fuel filter (1).
2. Clean the area around air bleeder plug (2) and loosen the air bleeder plug.
3. Push priming pump (3) repeatedly.
   Wipe off the fuel coming out of the air bleeder plug with a waste cloth.
4. When fuel without bubbles comes out of the air bleeder plug, tighten the air bleeder plug.
   Tightening torque: 2 ± 0.2 N·m (1.5 ± 0.1 lbf·ft)
5. After tightening the plug, push the priming pump for 20 times or more again.
6. After the air bleeding is completed, wipe off the spilled fuel.
7. Start the engine and make sure that there is no fuel leakage.

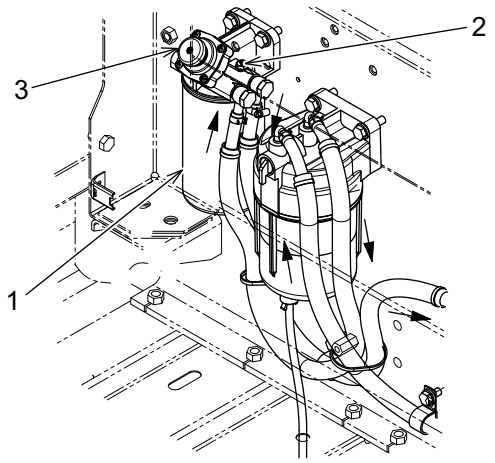

Copyright©2022 Kobelco Construction Machinery Co.,Ltd. All rights reserved. [S2LC00054ZE11] [0609CsCshWbYs]

4.10.8 RELEASING INTERNAL PRESSURE IN HYDRAULIC SYSTEM

Before replacing the front attachment and the hydraulic pipes, release the internal pressure of the hydraulic system. Release the internal pressure of the hydraulic system following the procedures below.

WARNING RELEASING INTERNAL PRESSURE IN HYDRAULIC SYSTEM

Immediately after operation, each part is hot and it may cause burns. Start operation after the temperature goes down.

1. Move the machine to a level and firm place.
2. Retract the arm cylinder and bucket cylinder, and place the bucket on the ground.
3. Start the engine.
4. Press and hold pressure release switch (1) for 5 to 10 seconds. Then release pressure release switch (1) for 1 to 5 seconds, and press and hold pressure release switch, again for 5 to 10 seconds. "DRAINING HYD. PRESS" appears on the multi-display and the engine speed becomes a low speed.
5. The buzzer sounds intermittently. (To stop the buzzer, press the buzzer stop switch).
6. Move the attachment control lever in this state to release the pressure. Be careful that the attachment may move to some extent due to its own weight.
7. Set the starter key to the "OFF" position to stop the engine and to finish the internal pressure release operation.
8. When the internal pressure release is failed, "FAIL DRAIN HYD. PRESS" is displayed on the multi-display, and the buzzer sounds continuously. Perform Step 4 to 7, again.

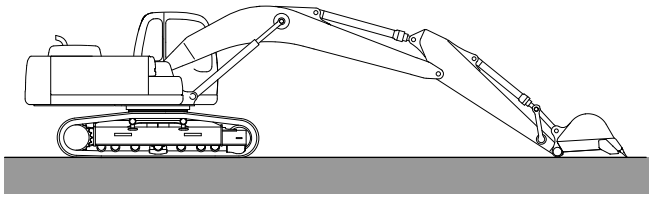

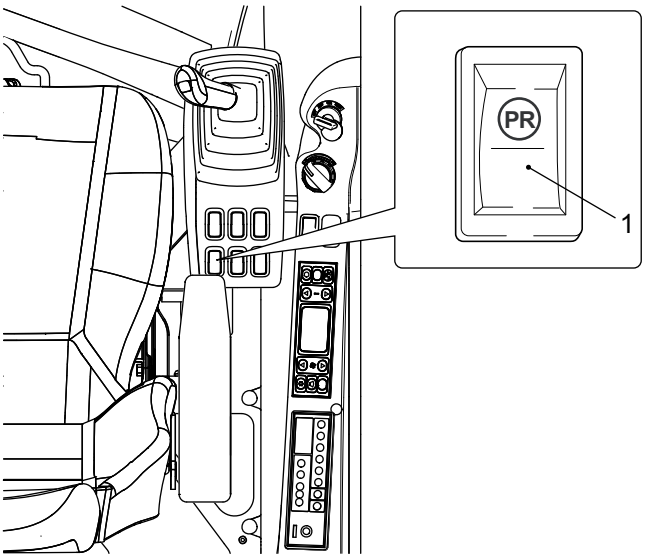

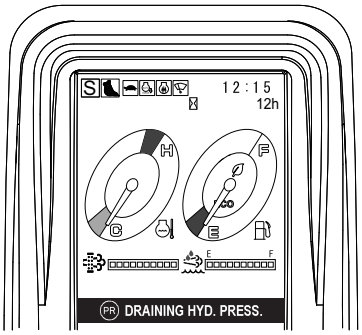

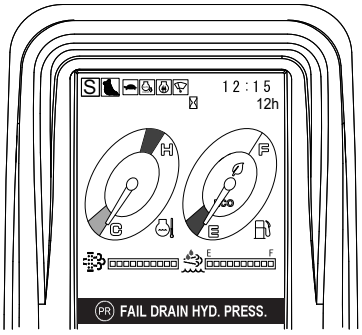

Copyright©2022 Kobelco Construction Machinery Co.,Ltd. All rights reserved. [S2LC00054ZE11] [0609CsCshWbYs]

4.10.9 GREASING ATTACHMENT/EQUIPMENT

When greasing the boom side bosses located at the boom cylinder rod installation part, grease two grease nipples shown in the figure.

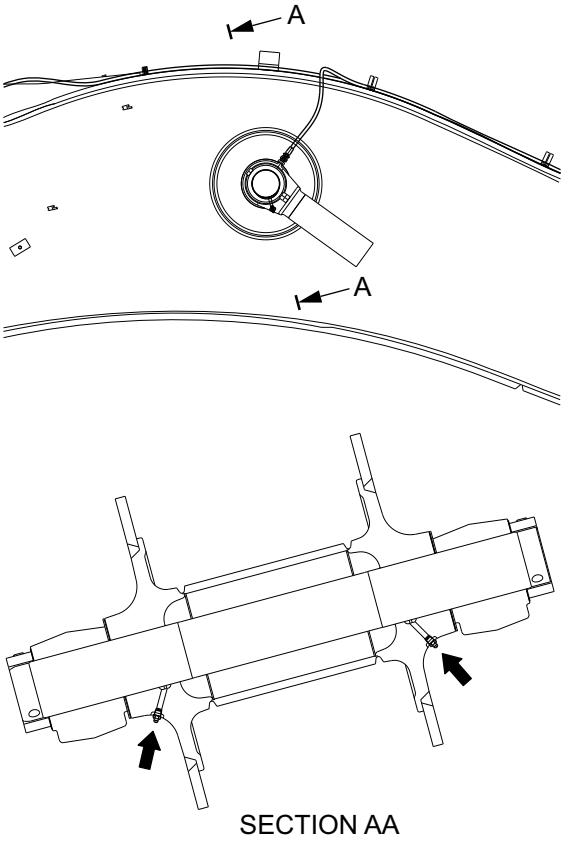

SECTION AA

Notice

Some machine specifications do not have the grease nipples for greasing.

Copyright©2022 Kobelco Construction Machinery Co.,Ltd. All rights reserved. [S2LC00054ZE11] [0609CsCshWbYs]

4.10.10 GREASING ATTACHMENT/EQUIPMENT (2 POSITION BOOM)

When greasing the bosses at the boom lower side located at the boom cylinder rod installation part, grease one grease nipple shown in the figure.

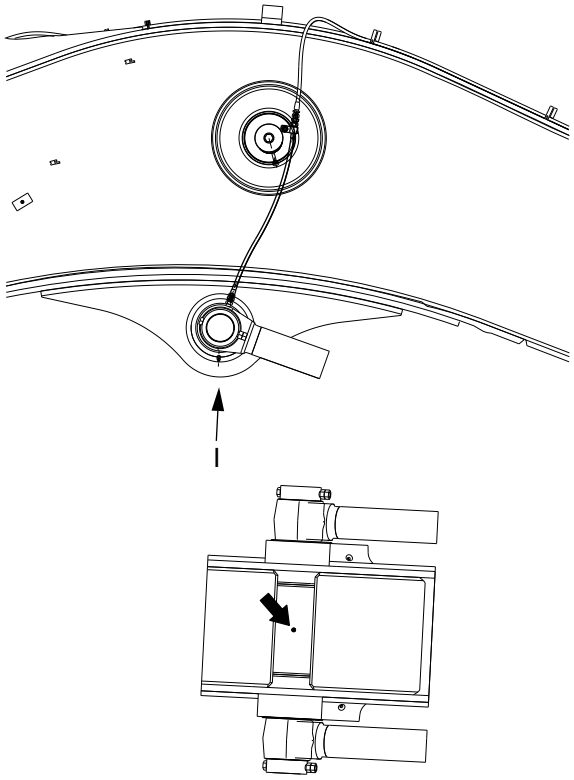

VIEW I

Notice

Some machine specifications do not have the grease nipples for greasing.

Copyright©2022 Kobelco Construction Machinery Co.,Ltd. All rights reserved. [S2LC00054ZE11] [0609CsCshWbYs]

4.11 8 HOUR (DAILY) INSPECTION & MAINTENANCE PROCEDURES

Thoroughly read and understand "SAFETY PRECAUTIONS" of this manual before performing the inspection and maintenance.
See "EVERYDAY CHECK-UP", "CHECK BEFORE STARTING ENGINE" and "CHECK AFTER STARTING ENGINE" to perform a daily pre-operation inspection and maintenance (before operation and immediately after starting operation).

4.11.1 GREASING ATTACHMENT

Before applying grease, set the machine in the grease application position as shown in the figure, remove all grease nipples, and then apply grease until the grease comes out through the gap between the pin and the hole. The grease gun is located inside the cover on the right front of the machine.

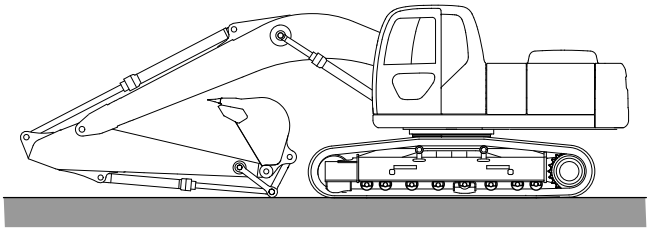

Notice

- Grease greasing points (1) to (14) every 8 hours during the first 50 hours of operation by a new machine. Also, them when 250 hours and 500 hours of operation by the new machine has been reached respectively. After that, grease them every 500 hours or every 6 months, whichever comes first. Also, regarding the pins around the bucket, grease them every 250 hours.
- For digging work in the water, grease the submerged parts before and after the work every day.
- After heavy duty work with a special attachment, grease the machine every day.
- Grease the machine before the work if it has not been used for one month or longer.

- Grease grease nipples (1) on the right and left boom cylinder heads.

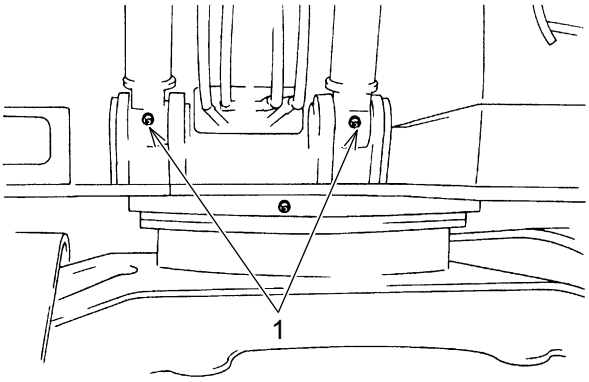

Copyright©2022 Kobelco Construction Machinery Co.,Ltd. All rights reserved. [S2LC00054ZE11] [0609CsCshWbYs]

- Among the grease nipples in 5 locations near the boom foot, grease the boom foot pin from (2) and (3), the boom cylinder rod from (4) and (5), and the arm cylinder head from (6). Also, grease grease nipple (7) in the center of boom foot.

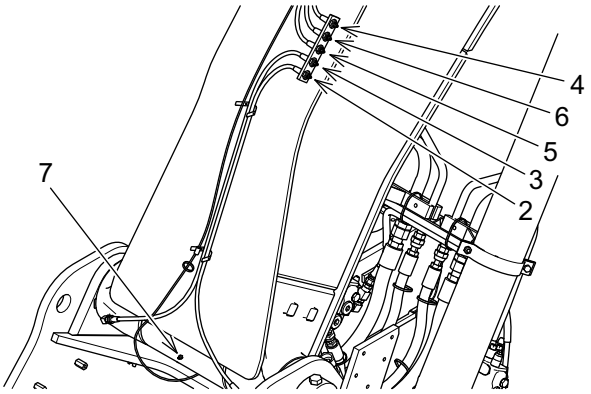

- Grease grease nipple (8) on the arm cylinder rod, grease nipple (9) in the connecting part between the boom and the arm, and grease nipple (10) on the bucket cylinder head.

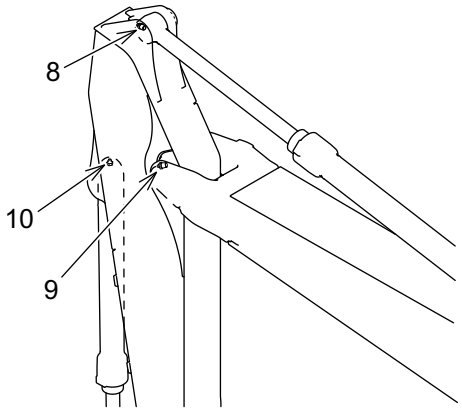

- Grease grease nipple (11) on the link pin, grease nipple (12) on the bucket cylinder rod, three grease nipples (13) on the bucket link, and grease nipple (14) on the left side of the arm end.

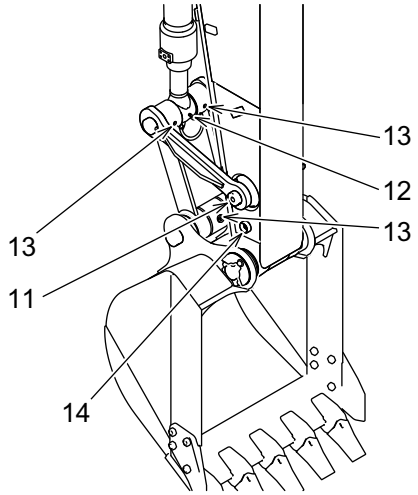

Copyright©2022 Kobelco Construction Machinery Co.,Ltd. All rights reserved. [S2LC00054ZE11] [0609CsCshWbYs]

4.12 50 HOUR INSPECTION & MAINTENANCE PROCEDURES

Thoroughly read and understand "SAFETY PRECAUTIONS" of this manual before performing the inspection and maintenance.
Perform this section together with "8 HOUR (DAILY) INSPECTION & MAINTENANCE PROCEDURES" in Chapter 4.

4.12.1 INSPECTING AND MAINTAINING BATTERY

WARNING INSPECTING AND MAINTAINING BATTERY

- Wear protective glasses, long-sleeve shirt and gloves when handling the batteries.
- Do not bring a fire near the battery because the combustible hydrogen gas generated by the battery can cause explosion.
- If the dilute sulfuric acid in the battery splashes onto your skin or into your eyes, it will cause burns or blindness. At such case, immediately wash the skin or eyes with sufficient clean water, and ask a special doctor to treat it as soon as possible.
- Before performing inspection and maintenance on the batteries, be sure to stop the engine.
- Confirm that the battery power-off switch is set to the OFF position to cut off the current.
- When removing the battery terminal, be sure to remove the ground side (negative terminal) first and conversely, when attaching the battery terminal, attach the ground side last.
- Do not put tools and hardware on the protective cover on the battery upper section. It may cause a short circuit resulting in a fire or explosion.

CAUTION

Before turning the battery power-off switch to the "O (OFF)" position or removing the battery terminals, turn the starter switch to the OFF position, wait 5 minute or more.
If the battery power is turned off immediately after stopping the engine, it may cause damage to the exhaust gas cleaning device.

CHECKING BATTERY ELECTROLYTE LEVEL

Notice

- Clean the battery terminals, and apply grease or commercial anti-rust lubricant spray.
- Do not dispose of the batteries by yourself but always ask a professional service company to dispose of it.
- If the batteries became old, do not attempt to use the old battery and a new battery together. The service life of the new battery may be shortened. When replacing the batteries, replace both at the same time.

1. Use the starter key to open the side door at the left side of the machine, and hold it with the stay.

Copyright©2022 Kobelco Construction Machinery Co.,Ltd. All rights reserved. [S2LC00054ZE11] [0609CsCshWbYs]

2. Turn the battery power-off switch OFF using key (1).

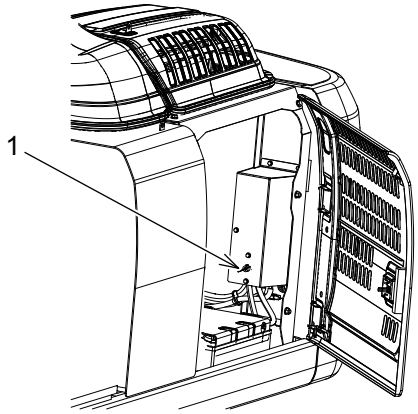

3. Remove nut (2) and washer (3) on the battery protection cover, and remove protection cover (4).

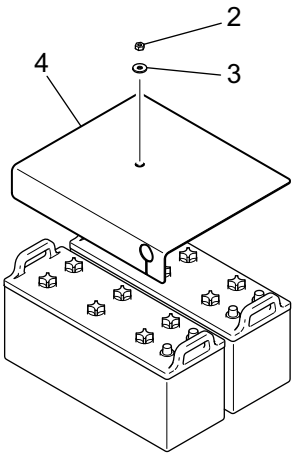

4. Remove cap (5), and if the level is below the specified level (10 to 15 mm above the electrode plate), supply distilled water to the specified level.
5. Clean the vent hole of the battery cap, and tighten cap (5) firmly.
6. Put battery cover (4) back to the original position.
7. Install battery cover (4) with nut (2) and washer (3).
8. Remove the support stay, and close the side door.

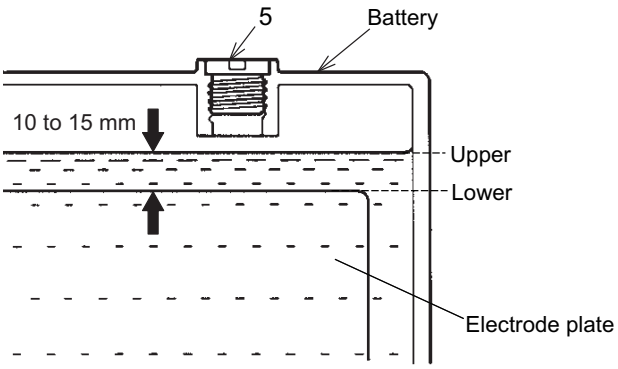

Copyright©2022 Kobelco Construction Machinery Co.,Ltd. All rights reserved. [S2LC00054ZE11] [0609CsCshWbYs]

SPECIFIC GRAVITY OF BATTERY ELECTROLYTE

CAUTION

PRECAUTIONS IN COLD CLIMATES

- Be careful of retaining the temperature of the batteries. If the temperature is too low, they may freeze, and their electric capacity decrease significantly.
- Charge the batteries as soon as possible.

Notice

Measure the specific gravity of battery electrolyte after its temperature becomes almost the same as the outdoor temperature, instead of immediately after finishing operation.

- The specific gravity of the battery electrolyte varies according to the fluid temperature; therefore, retain the temperature within the range of use as shown in the following table. If the specific gravity is at the lower limit or below (small value), charging is necessary.

Specific Gravity of Battery Electrolyte

Charging rate	Battery electrolyte temperature		
	-20 degrees C (-4 degrees F)	0 degrees C (32 degrees F)	20 degrees C (68 degrees F)
100 %	1.31	1.29	1.28
90 %	1.29	1.28	1.26
80 %	1.28	1.26	1.25
75 %	1.27	1.25	1.24

Copyright©2022 Kobelco Construction Machinery Co.,Ltd. All rights reserved. [S2LC00054ZE11] [0609CsCshWbYs]

4.12.2 DRAINING WATER AND SEDIMENT IN FUEL TANK

WARNING HANDLING OF FUEL OIL

- Wipe off spilled fuel to prevent a fire.
- Make sure that there is no fuel leakage after performing work.

1. Move the machine to a level and firm place.
2. Swing the upper structure to a range in which drain cock (1) under the fuel tank can be released, and put the bucket on the ground.
3. Stop the engine, and set the pilot control shut-off lever to the "LOCKED" position.
4. Place a container for drain water and sediment under drain cock (1).
5. Insert your hand through the hole in the under cover and set drain cock (1) to "OPEN" position (A) to drain water and sediment deposited on the bottom. At this time, be careful not to be splashed by the drain fuel.

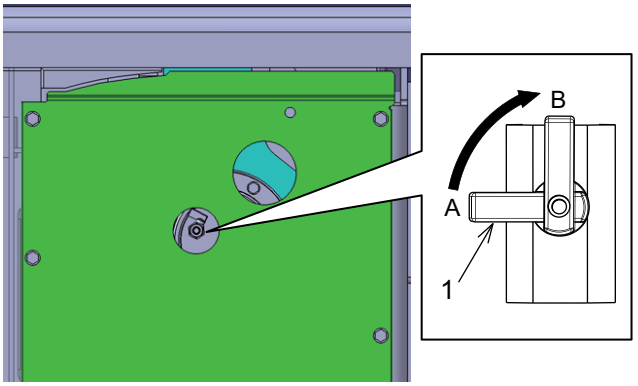

6. Set drain cock (1) to "CLOSED" position (B) when clean fuel comes out.

WHEN INSTALLING NOZZLE

Notice

A nozzle to suppress splashing of drain water and sediment can be attached to the drain cock.
Use this as necessary.

1. Take out nozzle (2) from the tool box.
2. Loosen the bolts of the cover under the fuel tank and remove the cover.
3. Attach the nozzle to the drain valve.
   Tightening torque of nozzle: 10.0 N·m
4. Open the drain cock and when clean fuel comes out, close the drain cock.

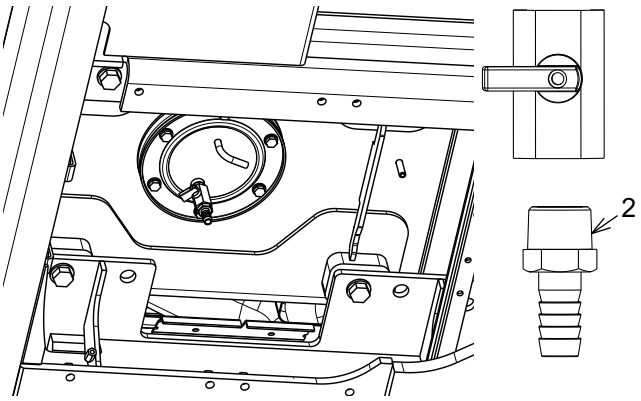

Copyright©2022 Kobelco Construction Machinery Co.,Ltd. All rights reserved. [S2LC00054ZE11] [0609CsCshWbYs]

4.12.3 ADJUSTING CRAWLER TENSION

Notice

- Before inspecting and greasing the crawler, remove soil adhered to the crawler tracks completely by washing them.
- Crawler adjustment is necessary depending on the work condition at the working site. At a working site covered with many gravel and cobbles, loosen the crawler tension slightly, and on a firm ground, increase the tension slightly.

CHECKING CRAWLER TENSION

- Measure the upper part of the shoe and the lower part of the track frame, while raising one of the crawlers up, for which tension is to be measured. In this case, hold the raised machine with a stand securely.

  A proper tension: 350 to 380 mm (13.8 to 15.0 inch)

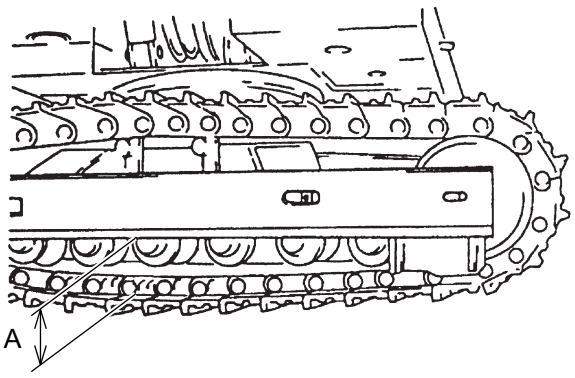

CRAWLER TENSION ADJUSTMENT PROCEDURES

WARNING ABOUT CRAWLER FAILURE

When a crawler cannot be adjusted, the crawler has a failure.
A strong force is applied to the spring of track spring. Grease in the cylinder is under high pressure. If the travel system is adjusted or disassembled in a wrong way, it is very dangerous and could cause severe personal injury. Contact your KOBELCO authorized dealer for repair immediately.

1. Crawler tension is adjusted by applying grease to grease nipple (1) of the idler adjuster of lower frame with a grease gun.
2. In order to make the both tension of the left and right crawlers equal each other, travel the machine forward and backward to even out the pressure.
3. Check the amount of slack of the crawlers once again and readjust them as necessary.
4. Perform the same adjustment on another side crawler.

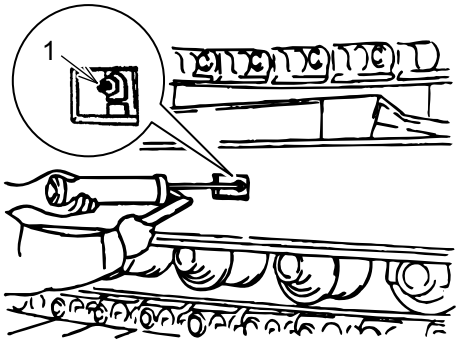

Copyright©2022 Kobelco Construction Machinery Co.,Ltd. All rights reserved. [S2LC00054ZE11] [0609CsCshWbYs]

CRAWLER LOOSENING PROCEDURES

WARNING ABOUT HANDLING OF GREASE CYLINDER

Wear protective glasses.
Grease cylinder is under high pressure. If you loosen the grease nipple rapidly, high pressure grease will spout and may cause severe personal injury. Never position your body or face in front of the plug. Loosen the grease nipple gradually.
Do not loosen the grease nipple more than one turn because it can pop out due to the internal high pressure grease.

1. Loosen grease nipple (1) of the grease cylinder maximum one turn slowly to drain the grease. When the grease is not drained well, raise the crawler to be loosened and rotate the crawler slightly.
2. When the tension of crawler is adjusted properly, tighten grease nipple (1).
   For the tightening torque, see "TIGHTENING TORQUES FOR BOLTS & NUTS (SPECIFIC POSITIONS)" in Chapter 4.

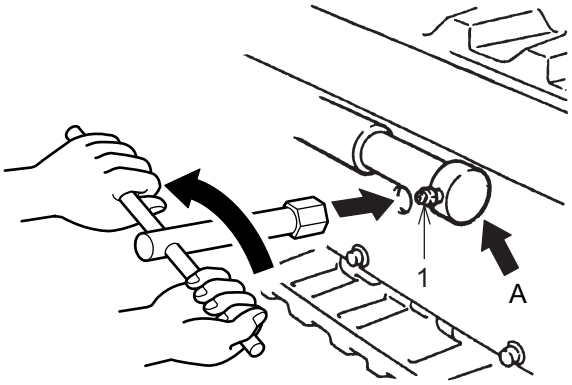

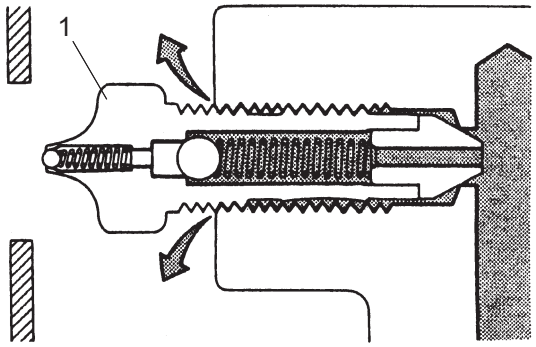

Details of A Section (Grease Discharge)

Copyright©2022 Kobelco Construction Machinery Co.,Ltd. All rights reserved. [S2LC00054ZE11] [0609CsCshWbYs]

4.13 120 HOUR INSPECTION & MAINTENANCE PROCEDURES

Thoroughly read and understand "SAFETY PRECAUTIONS" of this manual before performing the inspection and maintenance.
Perform this section together with "EVERYDAY CHECK-UP and 50 HOUR INSPECTION & MAINTENANCE PROCEDURES".

4.13.1 CHECKING OIL LEVEL OF SWING REDUCTION UNIT

WARNING ABOUT OIL TEMPERATURE IMMEDIATELY AFTER OPERATION

Immediately after operation, the oil is hot and it may cause burns. Start working after the temperature goes down.

1. Move the machine to a level and firm place.
2. Put the bucket on the ground.
3. Stop the engine and move the control lock lever to the "LOCKED" position.
4. Use level gauge (1) to check the level of gear oil. When the level is within the specified range of the scale of level gauge (1), it is proper.
5. If the gear oil level is low, remove level gauge (1) and refill the specified gear oil from the filler port. For the specified gear oil, see "LUBRICANT, FUEL & COOLANT SPECIFICATIONS" in Chapter 4.
6. Attach level gauge (1).

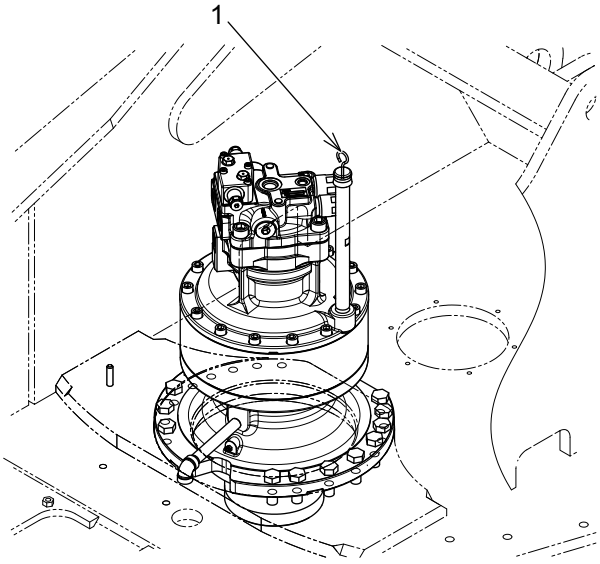

Copyright©2022 Kobelco Construction Machinery Co.,Ltd. All rights reserved. [S2LC00054ZE11] [0609CsCshWbYs]

4.13.2 CHECKING OIL LEVEL OF TRAVEL REDUCTION UNIT

WARNING ABOUT CHECKING OIL LEVEL

- Pressure may be generated inside the traveling devices. Slowly loosen the plug to release the internal pressure and then remove the plug. When the plug is loosened abruptly, the plug and oil may pop out and it is dangerous. Never position your body or face in front of the plug.
- Immediately after operation, the oil is hot and it may cause burns. Start working after the temperature goes down.

1. Move the machine to a level and firm place.
2. Stop the machine at a position in which drain plug (1) is positioned at the lower side and lower the bucket to the ground.
3. Stop the engine and move the pilot control shut-off lever to the "LOCKED" position.
4. Remove level plug (2) and check the level and contamination of the gear oil.
   If the oil level is up to the neck of the level plug, it is proper.
5. If the gear oil level is low, remove level plug (2) and refill the specified gear oil.
   For specified gear oil, see "LUBRICANT, FUEL & COOLANT SPECIFICATIONS" in Chapter 4.
6. Clean level plug (2) with light oil and install them.
7. Check the other travel reduction unit in the same procedure.

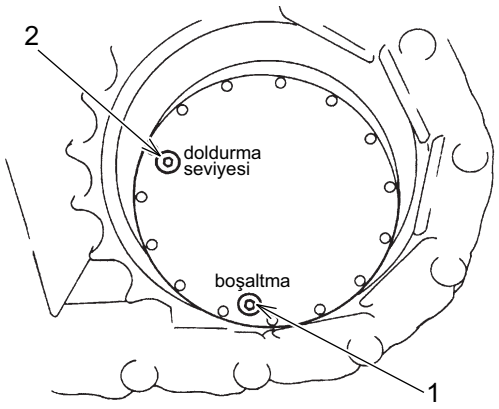

Copyright©2022 Kobelco Construction Machinery Co.,Ltd. All rights reserved. [S2LC00054ZE11] [0609CsCshWbYs]

4.13.3 CHECKING INTAKE SYSTEM RUBBER HOSE

WARNING ABOUT HANDLING OF RUBBER HOSE

- Do not touch the hot parts. Contact with hot parts during operation or immediately after stopping operation may cause burns.
- When replacing the rubber hoses, cover the inlet with a clean cloth to prevent dust from entering it.

CHECKING RUBBER SUCTION HOSE FOR AIR CLEANER

1. Check that rubber hose (1) is not damaged or deteriorated and band (2) is not loose.
2. Rubber hose (1) which is damaged or deteriorated should be replaced with a new one together with band (2).

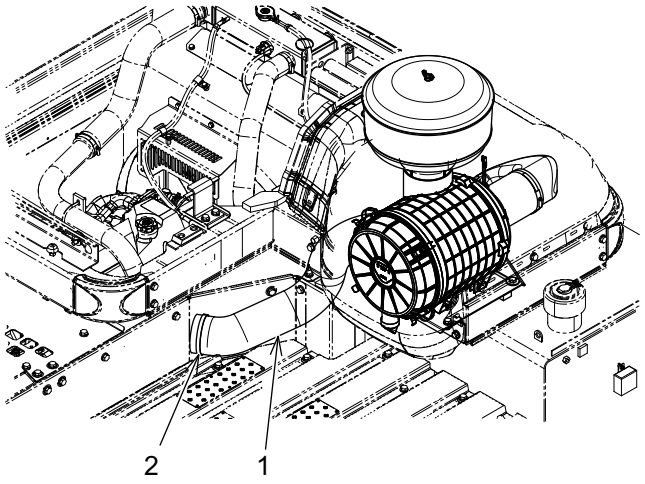

Copyright©2022 Kobelco Construction Machinery Co.,Ltd. All rights reserved. [S2LC00054ZE11] [0609CsCshWbYs]

CHECKING RUBBER HOSE OF INTERCOOLER

1. Check that rubber hose (1) is not damaged or deteriorated and band (2) is not loose.
2. Rubber hose (1) which is damaged or deteriorated should be replaced with a new one together with band (2).

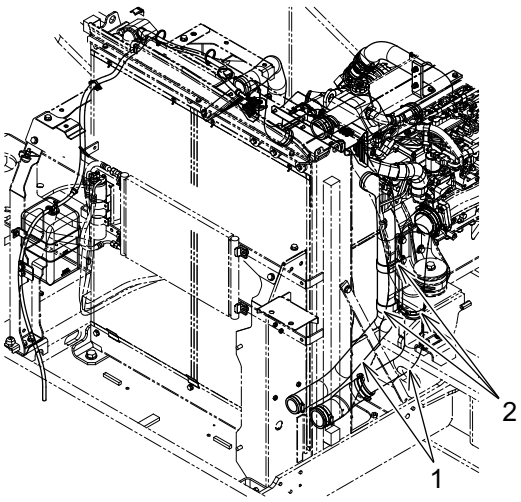

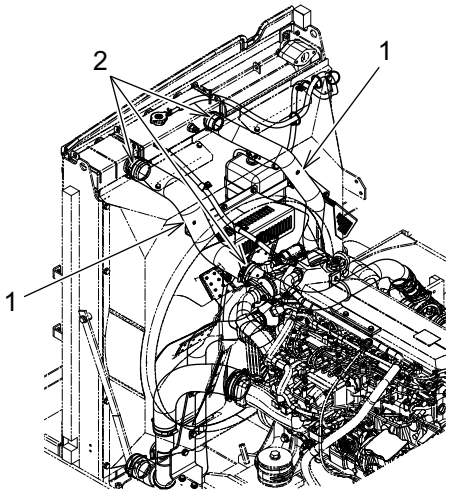

Copyright©2022 Kobelco Construction Machinery Co.,Ltd. All rights reserved. [S2LC00054ZE11] [0609CsCshWbYs]

4.14 250 HOUR (3-MONTH) INSPECTION & MAINTENANCE PROCEDURES

Thoroughly read and understand "SAFETY PRECAUTIONS" of this manual before performing the inspection and maintenance.
Perform this section together with "EVERYDAY CHECK-UP, and 50, and 120 HOUR INSPECTION & MAINTENANCE PROCEDURES".

4.14.1 ADJUSTING FAN BELT AND AIR CONDITIONING COMPRESSOR BELT

CHECKING FAN BELT AND AIR CONDITIONING COMPRESSOR BELT

WARNING INSPECTING AND MAINTAINING BELT

Be sure to stop the engine before inspection and maintenance of the engine.
Inspecting and maintaining the running engine may cause severe injury by being caught in the rotating parts, such as the fan and the belt.

CAUTION

Replace the belt with a new one if flaking or breakage is found on the belt by the inspection, slip occurs excessively, or the belt cannot be adjusted to within the adjustment range. Keep the belt away from oils. The service life may be shortened if it slips by oil.

Notice

- When the belt is replaced by a new one, the belt does not have the initial adaptability. Run the engine at idle for 3 to 5 minutes and then adjust the belt tension again.
- After running the engine for about 2 hours, a new belt obtains a complete initial elongation.
- When replacing a set of two belts, be sure to replace both two with new ones.

The engine of this machine is equipped with the alternator, fan, and an air conditioning compressor belts.
Check the belts for wear and damage, and also for tension, and adjust them properly in order to maintain the maximum engine performance and the service life.

Copyright©2022 Kobelco Construction Machinery Co.,Ltd. All rights reserved. [S2LC00054ZE11] [0609CsCshWbYs]

- To check the belt tension, press on the center of the belt with your thumb. If the deflection falls within the range shown in the following table, it is normal.

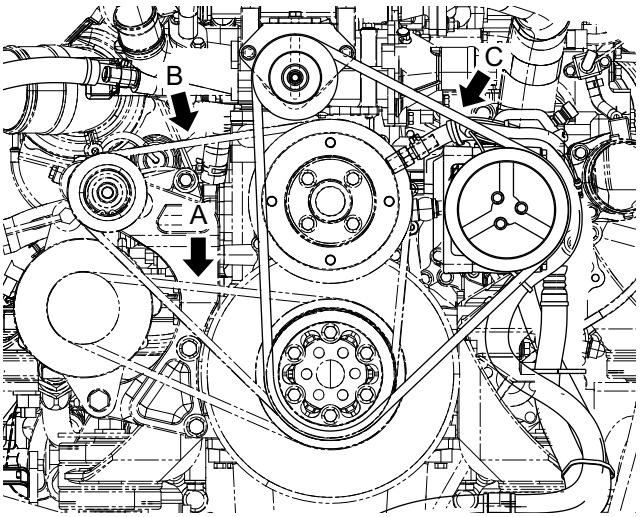

Belt	New Belt Tension mm (inch)	At Inspection mm (inch)	Pushing Force N (lbf)
Alternator (A)	10 to 12 (0.39 to 0.47)	15 to 17 (0.59 to 0.67)	98 (22)
Fan (B)	10 to 12 (0.39 to 0.47)	15 to 17 (0.59 to 0.67)	98 (22)
Air conditioner (C)	5 to 6 (0.20 to 0.23)	7 to 8 (0.28 to 0.32)	27 (6.1)

Copyright©2022 Kobelco Construction Machinery Co.,Ltd. All rights reserved. [S2LC00054ZE11] [0609CsCshWbYs]

ADJUSTING ALTERNATOR AND FAN BELT

WARNING INSPECTING AND MAINTAINING THE BELT

Be sure to stop the engine before inspection and maintenance of the engine.
Inspecting and maintaining the running engine may cause severe injury by being caught in the rotating parts, such as the fan and the belt.

IMPORTANT

An improperly installed belt may not only decrease the performance of compressor but also damage the belt and the compressor.

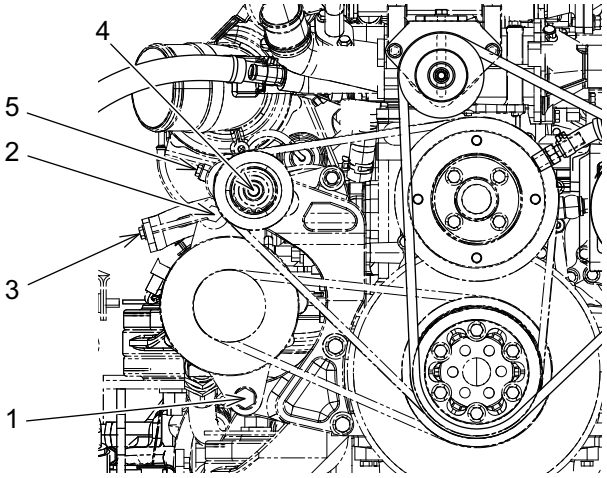

1. Open the engine hood with the starter key and hold it with the stay.
2. Remove the fan guard.
3. Loosen mounting bolt (1) and adjusting nut (2) slightly to adjust the tension of belt.
4. Loosen adjusting bolt (3), adjust the alternator and fan belt to the specified tension, and tighten mounting bolt (1) and adjusting nut (2).
   Tightening torque
   Mounting bolt (1): 51 N·m (38 lbf·ft)
   Adjusting nut (2): 83 N·m (61 lbf·ft)
5. Loosen mounting bolt (4) slightly.
6. Loosen adjusting bolt (5) and adjust the fan belt to the specified tension, and then tighten mounting nut (4).
7. After adjustment, run the engine at low idle for about 5 minutes.
8. Step the engine and check the fan belt tension.
9. Attach the fan guard.
10. Remove the support stay and close the engine hood.

Copyright©2022 Kobelco Construction Machinery Co.,Ltd. All rights reserved. [S2LC00054ZE11] [0609CsCshWbYs]

ADJUSTING TENSION OF AIR CONDITIONING COMPRESSOR BELT

WARNING INSPECTING AND MAINTAINING THE BELT

Be sure to stop the engine before inspection and maintenance of the engine.
Inspecting and maintaining the running engine may cause severe injury by being caught in the rotating parts, such as the fan and the belt.

IMPORTANT

An improperly installed belt may not only decrease the performance of compressor but also damage the belt and the compressor.

1. Open the engine hood with the starter key and hold it with the stay.
2. Loosen nut (1) of the idle pulley slightly, turn adjusting bolt (2) to adjust the belt and tighten nut (1).
   Tightening torque
   Nut (1): 46.5 ± 4.6 N·m (34.3 ± 3.4 lbf·ft)
3. After adjustment, run the engine at low idle for about 5 minutes and then check the belt tension again.
4. Remove the support stay and close the engine hood.

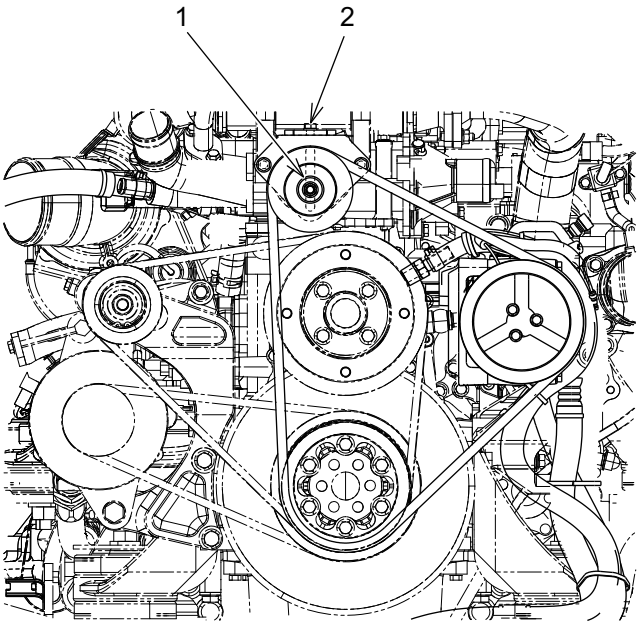

Copyright©2022 Kobelco Construction Machinery Co.,Ltd. All rights reserved. [S2LC00054ZE11] [0609CsCshWbYs]

4.14.2 CHECKING RADIATOR HOSES

If you find cracks, permanent set, and water leakage on the hoses, replace the hoses immediately. Serious damages such as engine overheat can be prevented.

INSPECTING RADIATOR HOSES

1. Use the starter key to open the engine hood, and hold it with the stay.
2. Check each hose for water leakage due to looseness of clamp (1) or cracking or permanent set of hose (2).
3. Tighten loosened clamp (1).
   Replace hose (2) having cracks or permanent set.

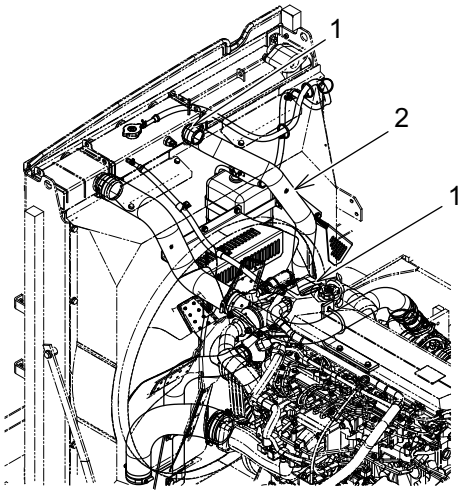

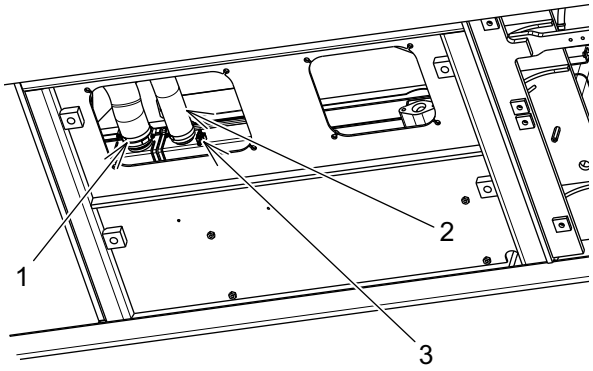

Copyright©2022 Kobelco Construction Machinery Co.,Ltd. All rights reserved. [S2LC00054ZE11] [0609CsCshWbYs]

REPLACING RADIATOR HOSES

WARNING REPLACING RADIATOR HOSES

Inside the radiator, the high pressure steam occurs and it may cause personal injury. Do not loosen or remove the radiator cap when the coolant is under high pressure and high temperature.

- Stop the engine before removing the radiator cap.
- Allow enough time for the coolant to cool down before removing the radiator cap.

1. Loosen six bolts under the radiator, and remove the cover.
2. Loosen radiator cap (1) slowly. After checking that the pressure is completely released, push the cap down, loosen it further, and then remove it.
3. Loosen drain cock (3) and drain the coolant into a container until the water level of the radiator becomes lower than hose (2) to replace.
4. Loosen clamp (1), remove damaged hose (2), and replace it with a new hose.
5. Tighten drain cock (3).
6. Refill the radiator with coolant and then fill the reserve tank with coolant.
7. After refilling, tighten the radiator cap securely.
8. Remove the support stay, and close the engine hood.
9. Install the cover on the specified position under the radiator.

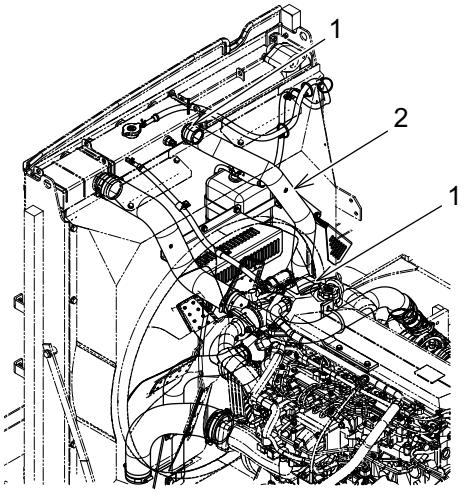

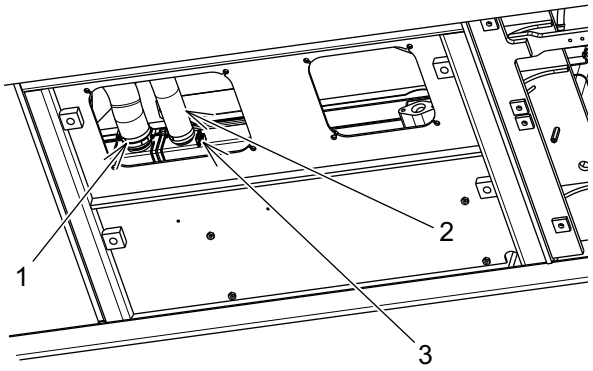

Copyright©2022 Kobelco Construction Machinery Co.,Ltd. All rights reserved. [S2LC00054ZE11] [0609CsCshWbYs]

4.14.3 CLEANING OR REPLACING AIR CONDITIONER FILTERS

IMPORTANT

The maintenance interval is a reference value. Clean the filters earlier than the specified interval in case the machine is being used in dusty area.

	Cleaning	Replacement
Recirculation air filter	Every 500 hours	After cleaning approximately 10 times
Fresh air filter	Every 250 hours	After cleaning approximately 10 times

CLEANING OR REPLACING AIR CONDITIONER FRESH AIR FILTER

1. Hold the handle grip of fresh air filter (1) at the left rear side of the operator's seat and pull it up straight.
2. Clean the recirculation/fresh air filters by blowing compressed air (0.2 MPa or less) to them.
3. Install the cleaned or replacement filters in the reverse order of removal.

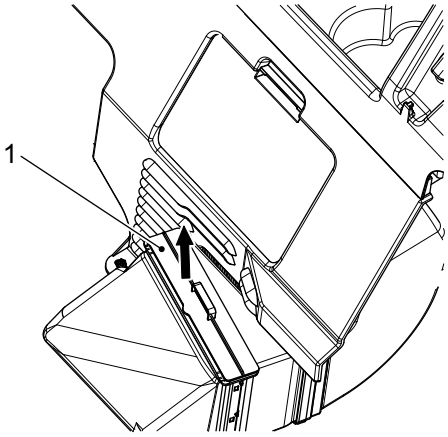

Copyright©2022 Kobelco Construction Machinery Co.,Ltd. All rights reserved. [S2LC00054ZE11] [0609CsCshWbYs]

CLEANING OR REPLACING OF AIR CONDITIONER RECIRCULATION AIR FILTER

1. Hold the top of cover (2) at the left rear side of the operator's seat, and pull it toward you.
2. Hold the handle of recirculation air filter (3) from the opening from which cover (2) is removed, and pull it up straight.
3. Clean the recirculation / fresh air filters by blowing compressed air (0.2 MPa or less) to them.
4. Install the cleaned or replacement filters in the reverse order of removal.

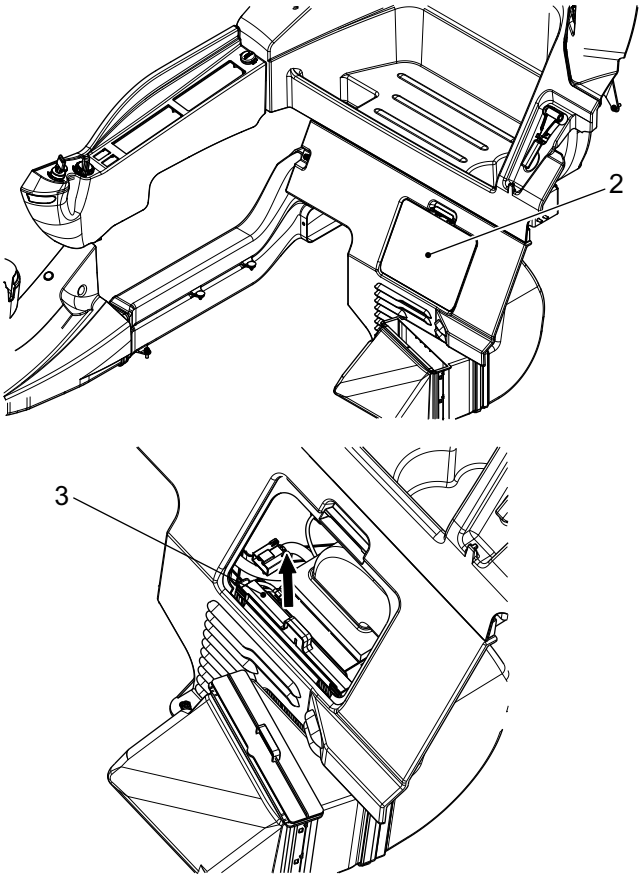

Notice

Install the recirculation air filter with the arrow facing rearward.

Copyright©2022 Kobelco Construction Machinery Co.,Ltd. All rights reserved. [S2LC00054ZE11] [0609CsCshWbYs]

4.14.4 INSPECTING, CLEANING, OR REPLACING AIR CLEANER ELEMENT

CAUTION

- Wear protective glasses or respirator when using compressed air.
- Before cleaning or replacing the air cleaner element, stop the engine.
- Do not remove the inner element except for replacing with a new one.
- When replacing the inner element, cover the inlet inside the air cleaner with a clean cloth or tape to prevent dust from entering it.

	Cleaning	Replacement
Outer element	When the warning is displayed on the multi-display or every 250 hours	After cleaning 6 times or after one year
Inner element	—	When replacing the outer element

CLEANING OR REPLACING OF OUTER ELEMENT

1. Open the door of the guard at the back side of the cab, by the starter key.

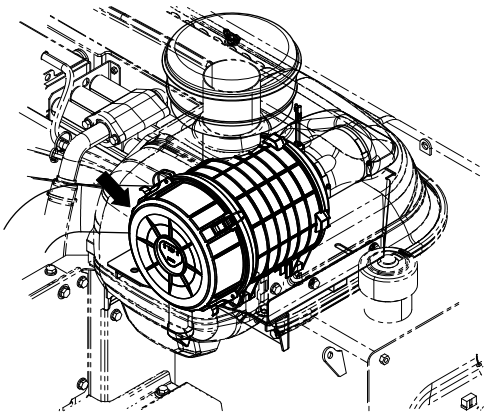

2. Remove the clamp from air cleaner cover (1) to open it.
3. Remove outer element (2), and clean inside the air cleaner.

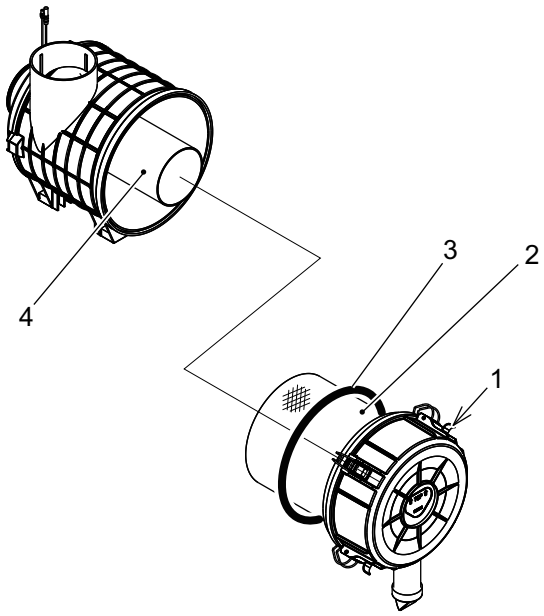

Copyright©2022 Kobelco Construction Machinery Co.,Ltd. All rights reserved. [S2LC00054ZE11] [0609CsCshWbYs]

4. From inside outer element (2), blow compressed air (0.2 MPa or less) along the folds. Then blow the compressed air from the outside along the folds, and then from the inside again.
   Do not hit the outer element to solid objects or clean the outer element by hitting it.
5. After cleaning, check outer element (2), and if holes and ruptures are found, replace it with a new one.
6. Install outer element (2), and place O-ring (3) to cover (1).

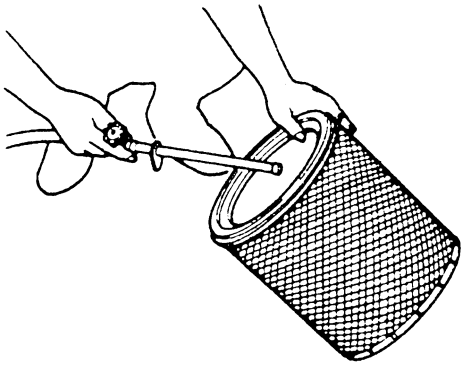

⚠CAUTION

Install the cover with the O-ring attached to the air cleaner.
Without the O-ring, water gets into the air cleaner, causing failure of the engine.

7. Install cover (1) to the air cleaner with the arrow facing up, and fix it with the clamp.
8. Close the side door, and lock it with the starter key.

REPLACING INNER ELEMENT

Replace the inner element when replacing the outer element.

1. Remove outer element (2), and then remove inner element (4).
2. Cover the inlet inside the air cleaner with a clean cloth or tape.
3. Clean inside the air cleaner.
4. Remove the cover at the inlet, and install new inner element (4).
5. Install new outer element (2) and then install O-ring (3) to cover (1).
6. Install cover (1) to the air cleaner with the arrow facing up, and fix it with the clamp.
7. Close the side door, and lock it with the starter key.

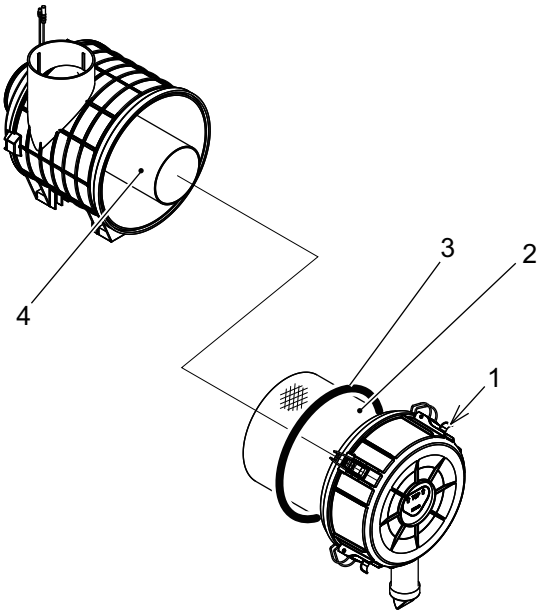

Copyright©2022 Kobelco Construction Machinery Co.,Ltd. All rights reserved. [S2LC00054ZE11] [0609CsCshWbYs]

4.14.5 CLEANING OR REPLACING RADIATOR CAP

WARNING HANDLING OF COOLANT AND CAP

Do not loosen or remove the reserve tank cap and the radiator cap when the coolant is under high pressure and high temperature.
High temperature steam and coolant will spray and could cause burns.

- When opening the cap, wait until the coolant cools down, and then slowly turn and open the radiator cap.
- The antifreeze is poisonous, so prevent it from contacting with skin. If the antifreeze gets into your eyes or on your skin, flush the eyes or skin with plenty of water, and seek medical attention.

CAUTION

Securely close the cap after opening it.

Inspection/cleaning	Replacement
Every 250 hours	If damaged, or every 1 year

1. Open the engine hood and hold it with the stay.
2. Loosen radiator cap (1) slowly. After checking that the pressure is completely released, push the cap down, loosen it further, and then remove it.
3. Check the following points of the cap. If foreign materials are adhered, remove them and if any damages are found, replace the parts.

   A: Contact surface between negative pressure valve (2) and gasket (5)

   B: Both surfaces of pressure valve (3) and gasket (5)

   C: Both surfaces of external lid (4) and gasket (6)
4. Close cap (1) and close the engine hood.

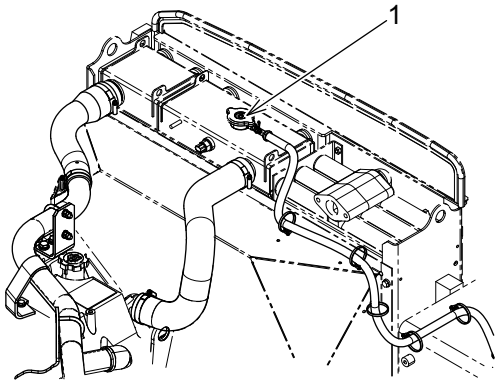

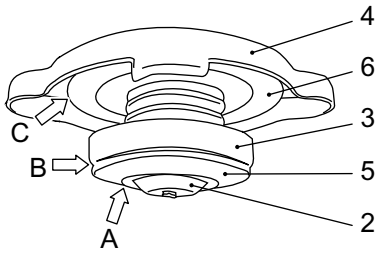

Copyright©2022 Kobelco Construction Machinery Co.,Ltd. All rights reserved. [S2LC00054ZE11] [0609CsCshWbYs]

4.15 500 HOUR (6-MONTH) INSPECTION & MAINTENANCE PROCEDURES

Thoroughly read and understand "SAFETY PRECAUTIONS" of this manual before performing the inspection and maintenance.
Perform this section together with "EVERYDAY CHECK-UP and 50, 100, 120, and 250 HOUR INSPECTION & MAINTENANCE PROCEDURES".

4.15.1 REPLACING ENGINE OIL AND ENGINE OIL FILTER

WARNING ABOUT HOT PARTS

- Contact with hot parts during operation or immediately after stopping operation may cause burns. Do not touch the hot parts.
- Immediately after operation, the oil and oil filter are hot. Start the replacement after the temperature goes down.

CAUTION

- Do not reuse the filter element, O-ring and gasket.
- When replacing the O-ring or gasket, check the fitting condition at the mounting surface to prevent it from being twisted and broken.

Notice

- Check drain engine oil, and if metal chips or powder is found in the oil, contact your KOBELCO authorized dealer/distributor.
- Change the engine oil after 50 hours of operation has been reached for the first time.
- When the engine oil is replaced, replace the engine oil filter as well.
- When the engine oil filter is replaced, run the engine at low idle for several minutes until the oil is filled in the filter.

1. Loosen the six bolts at the under cover just under the engine and remove the cover.
2. Place a container for drain oil under drain cock (2). Container: 30 L (7.9 Gal) or more

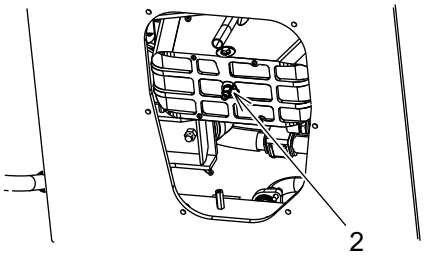

3. Clean the area around oil filler cap (1), remove the cap and loosen drain cock (2) of the engine oil pan to drain the oil.
4. After draining the oil, tighten drain cock (2) and oil filler cap (1) securely.

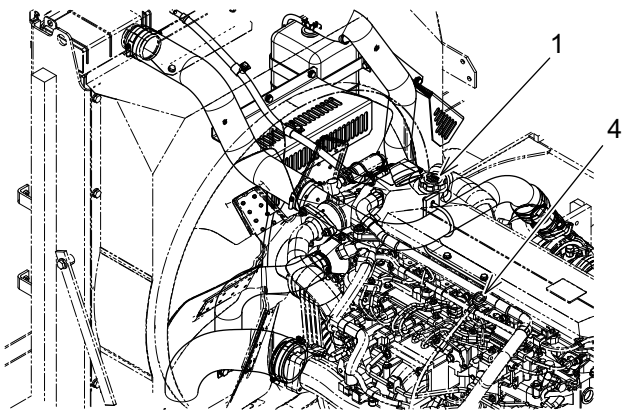

Copyright©2022 Kobelco Construction Machinery Co.,Ltd. All rights reserved. [S2LC00054ZE11] [0609CsCshWbYs]

5. Turn filter element (3) with a filter wrench and remove it.
6. Remove dirt and foreign materials from the mounting surface of the oil filter body.

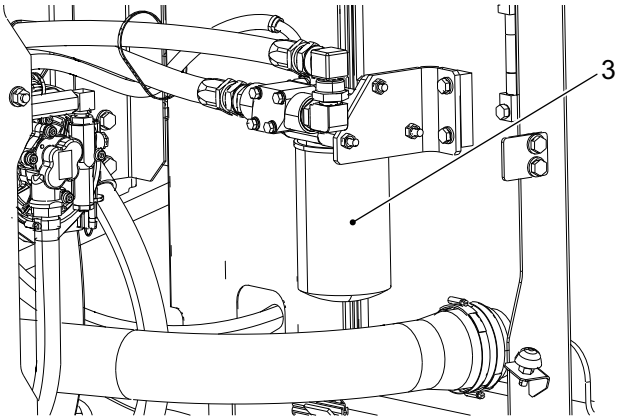

7. Apply engine oil to the gasket of new filter element and install the filter element by turning it by hand until it does not turn any more.

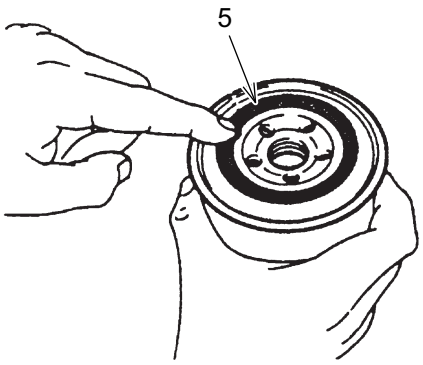

CAUTION

- Do not reuse the filter element, O-ring and gasket.
- When replacing the O-ring or gasket, check the fitting condition at the mounting surface to prevent it from being twisted and broken.

8. Tightening Torque: 23 to 27 N·m (17.0 to 19.9 lbf·ft)
9. Remove the oil filler cap and refill the specified engine oil from the oil filler port, referring to "LUBRICANT, FUEL & COOLANT SPECIFICATIONS" in Chapter 4.
10. Use level gauge (4) to check the engine oil level. Refill the engine oil to the proper level, which is between upper limit (H) and lower limit (L).
11. Attach oil filler cap (1).
12. Start the engine, run the engine at low idle for several minutes and stop the engine. About 10 minutes later, check the engine oil level. If the level is low, refill the engine oil repeatedly to the proper level.
13. Make sure that there is no leakage from the mounting surface of the oil filter.
14. Attach the cover under the engine to the original position.

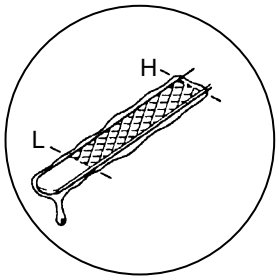

Copyright©2022 Kobelco Construction Machinery Co.,Ltd. All rights reserved. [S2LC00054ZE11] [0609CsCshWbYs]

4.15.2 REPLACING FUEL PRE-FILTER

1. Place a container for drain oil under the fuel pre-filter.
2. Set cock (1) to "close" position (A).
3. Clean the area around air bleeder plug (2).

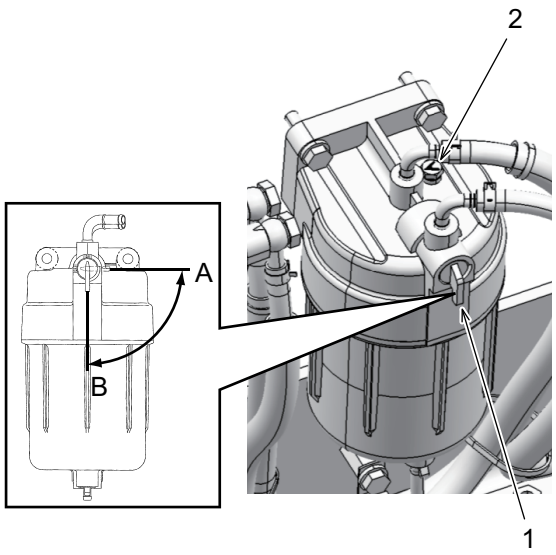

4. Loosen the air bleeder plug and drain plug (3) to drain the oil inside the fuel pre-filter.
5. Put socket (8) with 27 mm width across flats to hexagonal part (C) at the bottom of case (4) and then turn it by ratchet wrench (9) to remove the case.

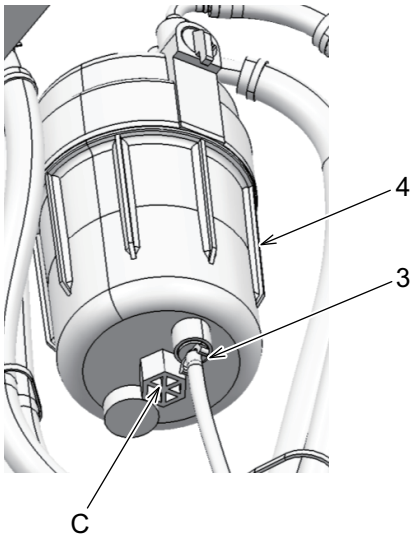

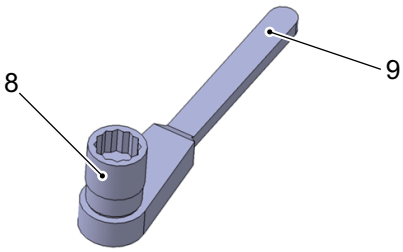

Copyright©2022 Kobelco Construction Machinery Co.,Ltd. All rights reserved. [S2LC00054ZE11] [0609CsCshWbYs]

6. Replace filter element (5) and gasket (6) with new ones.
   Apply a thin coat of light oil to the gasket before installing it to the case.

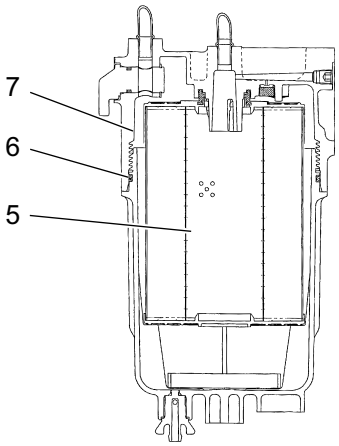

⚠CAUTION

- Do not reuse the filter element, O-ring and gasket.
- When replacing the O-ring or gasket, check the fitting condition at the mounting surface to prevent it from being twisted and broken.

7. Remove dirt and foreign materials inside cover (7).
8. Put socket (8) with 27 mm width across flats to hexagonal part (C) at the bottom of case (4) and then turn it by ratchet wrench (9) to install the case securely.
   Tightening torque: 30±2N·m (22.1±1.5 lbf·ft)
9. Tighten air bleeder plug (2) and drain plug (3).
10. Set cock (1) to "open" position (B).
11. Bleed the air according to "BLEEDING AIR FROM FUEL PIPING" in Chapter 4.
12. Start the engine, run it at idle speed for several minutes, and then check the filter mounting portion for oil leakage.

Copyright©2022 Kobelco Construction Machinery Co.,Ltd. All rights reserved. [S2LC00054ZE11] [0609CsCshWbYs]

4.15.3 REPLACING FUEL FILTER

WARNING HANDLING OF FUEL

- Wipe off spilled fuel to prevent a fire.
- Make sure that there is no fuel leakage after performing work.

1. Set cock (1) to "close" position (A).

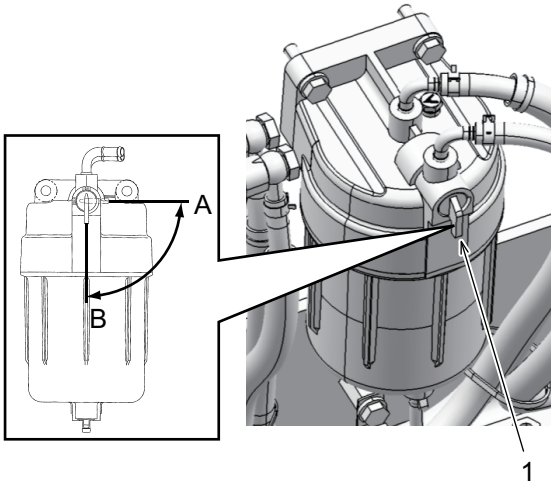

Copyright©2022 Kobelco Construction Machinery Co.,Ltd. All rights reserved. [S2LC00054ZE11] [0609CsCshWbYs]

2. Clean the area around air bleeder plug (2).
3. Turn filter element (3) by filter wrench (4) and remove it.

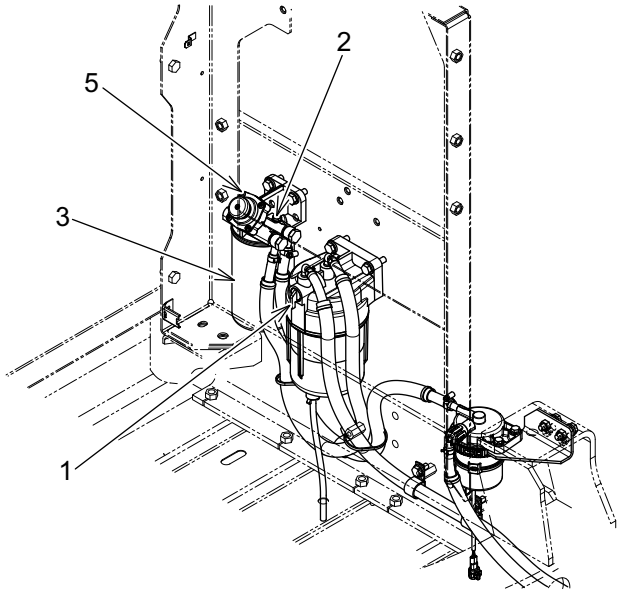

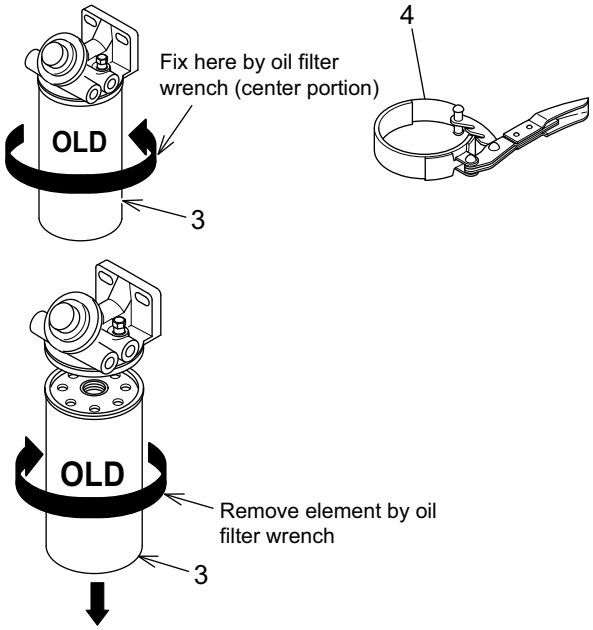

4. Remove dirt and foreign materials on the mounting surface of filter body (5).
5. Install a new filter element and new O-ring (6). Apply a thin coat of light oil to new O-ring (6) and attach it on the upper surface of filter element (3). Tightening torque: 44.1±4.9N·m (32.5±3.6 lbf·ft)

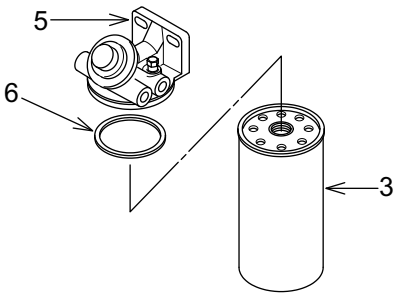

⚠CAUTION

- Do not reuse the filter element, O-ring, and gasket.
- When replacing the O-ring or gasket, check the fitting condition at the mounting surface to prevent it from being twisted and broken.

6. Turn filter element (3) with band type filter wrench (4) to install it securely.

Copyright©2022 Kobelco Construction Machinery Co.,Ltd. All rights reserved. [S2LC00054ZE11] [0609CsCshWbYs]

7. Tighten air bleeder plug (2).
8. Set cock (1) of the fuel pre-filter to "open" position (B).
9. Bleed the air according to "BLEEDING AIR FROM FUEL PIPING" in Chapter 4.

4.15.4 GREASING SWING BEARING

WARNING ABOUT GREASING SWING BEARING

Do not swing the machine while greasing the swing bearing because it is dangerous.

The grease nipple is at one location.

- Clean the grease nipple and swing the upper structure by every 90 degrees for greasing.
  Every time after swinging the upper structure, apply grease until the grease comes out through the seal of bearing.
  (About maximum 30 cc per each direction)

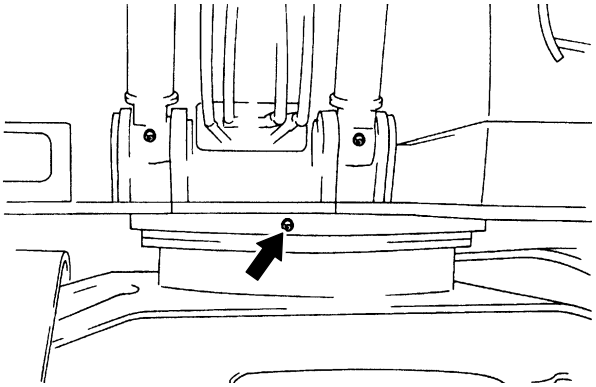

4.15.5 CHECKING SWING BEARING MOUNTING BOLT FOR LOOSENESS

Notice

Use a torque wrench when tightening the bolts of the swing bearing.

1. Check that bolts (1) and (2), which tighten the swing bearing are not loose.
2. When they are loose, remove bolts (1), and (2), apply the recommended thread locking agent (Loctite #262 or equivalent) and tighten them.
   Tighten diagonally positioned bolts alternately.

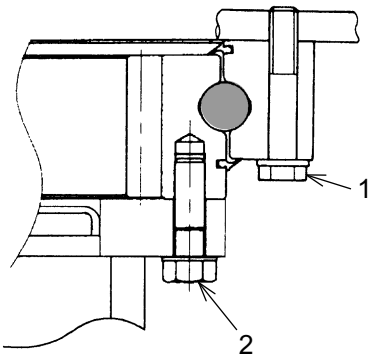

Mounting part	Tightening torque N·m(lbf·ft)
Inner race	932±93(687±69)
Outer race	932±93(687±69)

Copyright©2022 Kobelco Construction Machinery Co.,Ltd. All rights reserved. [S2LC00054ZE11] [0609CsCshWbYs]

4.15.6 CLEANING FUEL TANK CAP AND STRAINER

1. Stop the engine.
2. Climb up the step on the control valve from the right front of the machine.
3. If rubber cover (2) is attached on the fuel port, remove it, and turn filler cap (1) to open it using the starter key.
4. Check the seal on filler cap (1), and replace it if damaged.
5. Wash strainer (3) with clean light oil, and install it. Replace it if damaged.
6. Attach filler cap (1), and after locking it with the starter key, attach rubber cover (2) by aligning the orientation of fuel cap (1).

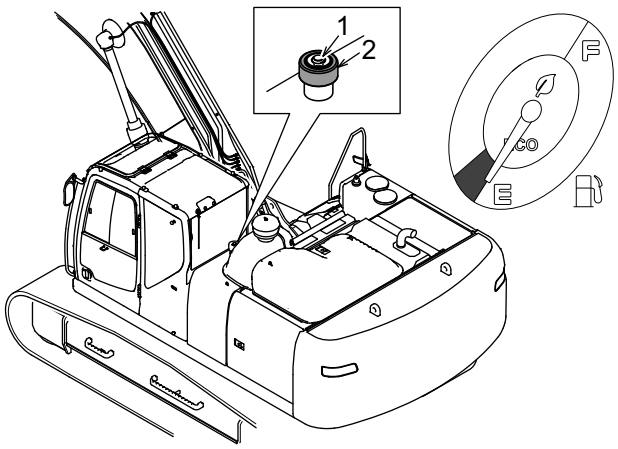

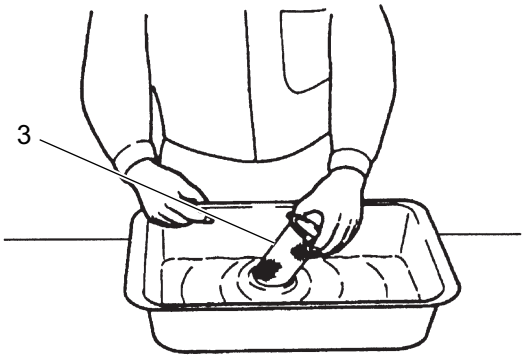

Copyright©2022 Kobelco Construction Machinery Co.,Ltd. All rights reserved. [S2LC00054ZE11] [0609CsCshWbYs]

4.15.7 LUBRICATING PUSH ROD OF CONTROL LEVER

1. Insert a flat-head screwdriver between boot (3) and plastic cover (4) to release four clicks one by one.

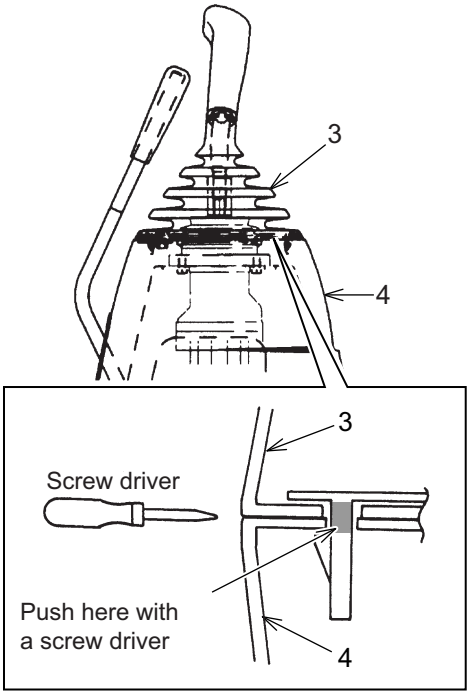

2. Remove the rubber boot and the boot of the pilot valve and apply a small amount of grease to the top end surfaces of push rod (1) and the rotational sliding section.
3. After applying the grease, install plastic cover (4) and boot (3).

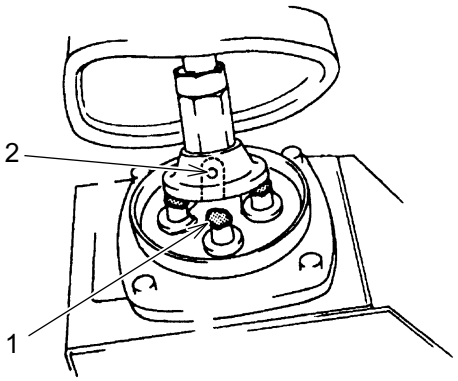

Copyright©2022 Kobelco Construction Machinery Co.,Ltd. All rights reserved. [S2LC00054ZE11] [0609CsCshWbYs]

4.15.8 CHECKING AIR CONDITIONER REFRIGERANT

WARNING REFRIGERANT

- Do not loosen the parts in the refrigerant circuit because there is a hazard of losing sight by getting coolant in your eyes and getting frostbite on your hands by touching it.
- Inhalation of the refrigerant may result in fatal injury. Also, do not bring a fire near the area where refrigerant gas is generated.

Notice

- When charging or replacing the refrigerant, confirm the type of refrigerant and use the specified refrigerant. (Refrigerant type: R-134a Quantity: 850 g ± 50 g)
  The use of unspecified refrigerant may cause damage of the components.
- Operate the air conditioner at least once every week for several minutes to rotate the compressor regardless of the season. This can prevent refrigerant gas from leaking through the compressor seal.
- If an oil stain is found around a pipe joint, it is a sign of gas leakage. Contact your KOBELCO authorized dealer for inspection.

Notice

Be sure to follow the following regulations to protect the global environment.

- Do not release the refrigerant is sealed in this product to the atmosphere without care.
- Collect the sealed refrigerant from the unit when disposing of this product.

1. Start the engine, and set the engine speed to the middle speed position of the engine throttle.
2. Fully open the windows of the cab and the doors.
3. Set the air conditioner as shown in the following.
   (1) Main Power Switch: ON
   (2) Fan Speed Selector Switch: HI
   (3) Temperature Setting Switch: MAX COLD
   (4) Air Conditioner Switch: ON

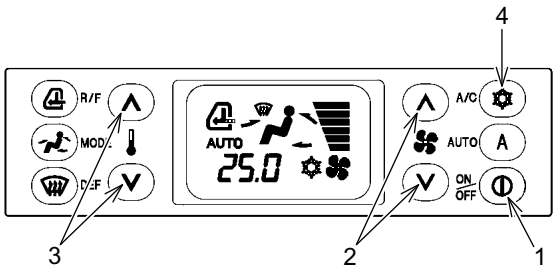

Copyright©2022 Kobelco Construction Machinery Co.,Ltd. All rights reserved. [S2LC00054ZE11] [0609CsCshWbYs]

4. Check the amount of the refrigerant by seeing sight glass (inspection window) (5). Regarding the criteria for the amount of charged refrigerant, see the following figure.

   A: The amount of refrigerant is proper.

   B: The refrigerant is over charged. This will make both high and low pressures rise and have an adverse effect on the pressure switch operation and the air conditioning system.

   C: The refrigerant is insufficient. Contact your KOBELCO authorized dealer for charging.

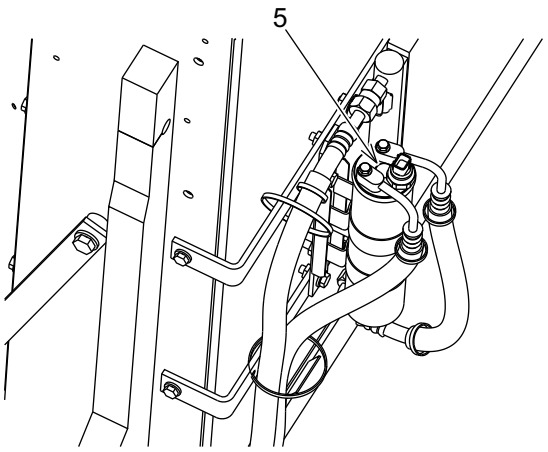

Refrigerant Amount	Condition of Sight Glass
A Proper ○	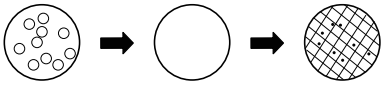 After turning ON the main power switch, a little bubbles are visible. Then it becomes transparent and later light opaque white.
B When over -charged ✕	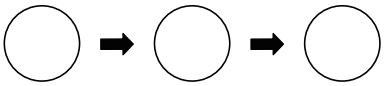 After turning ON the main power switch, no bubbles are visible.
C When insufficiently -charged ✕	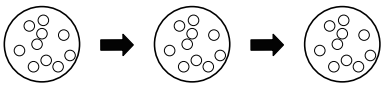 After turning ON the main power switch, bubbles are seen continuously.

 With bubbles: Both gas and liquid refrigerant are mixed.

 No bubbles: All refrigerant has become liquid and transparent.

 Opaque white color : Oil and refrigerant are separated, showing light opaque white color.

Copyright©2022 Kobelco Construction Machinery Co.,Ltd. All rights reserved. [S2LC00054ZE11] [0609CsCshWbYs]

4.16 1000 HOUR (12-MONTH) INSPECTION & MAINTENANCE PROCEDURES

Thoroughly read and understand "SAFETY PRECAUTIONS" of this manual before performing the inspection and maintenance.
Perform this section together with "EVERYDAY CHECK-UP and 50, 100, 120, 250, and 500 HOUR INSPECTION & MAINTENANCE PROCEDURES".

4.16.1 REPLACING RETURN FILTER

WARNING PAY ATTENTION TO HOT PARTS

- The oil in the hydraulic oil tank is under high pressure and high temperature.
  Before removing the cover, stop the engine first, remove the breather cap, press the valve, and release the pressure from the tank.
- Immediately after engine operation, the oil is hot and it may cause burns. Wait until the oil temperature cools down before attempting to change the hydraulic oil.

Notice

Hydraulic oil before filtration inside the filter contains dirt. When taking out the return filter, do not return the hydraulic oil remaining in the filter back to the tank.

Notice

- Order return filter element kit (7) P/NoLC52V01004R100.
  Replace the return filter after 50 hours of operation has been reached for the first time, and then every 1,000 hours.
  For breaker specification, replace it every 250 hours.
- A warning is displayed on the gauge cluster not only when the remaining maintenance interval set from the gauge cluster becomes 0, but also when the return filter is clogged. (See "WARNING DISPLAY SCREEN" in Chapter 2)
  Regardless of the setting time of maintenance, when the hydraulic oil filter replacement warning is displayed, replace the return filter.

1. Move the machine to a level and firm place.
2. Park the machine in the hydraulic oil level inspection position.
3. Stop the engine and move the pilot control shut-off lever to the "LOCKED" position.

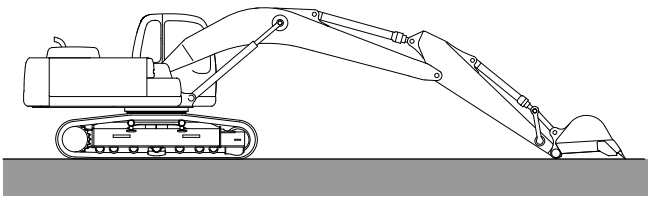

Copyright©2022 Kobelco Construction Machinery Co.,Ltd. All rights reserved. [S2LC00054ZE11] [0609CsCshWbYs]

4. Remove breather cap (1) on the top of the hydraulic oil tank and press the valve several times (5 to 7 times) to release the internal pressure of the hydraulic oil tank.

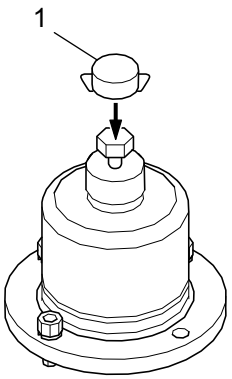

5. Remove bolt (2) and cover (3) on the tank upper surface.
6. Take out spring (5), check valve (6) and element assembly (7) from the tank.
   At this time, do not return the hydraulic oil remaining in the filter back to the tank.
7. Replace O-ring (4) on the mounting surface of cover (3).
8. Insert element assembly (7).
9. Attach the element by the reverse order of the steps 3 and 4.
10. Attach cover (3) with bolts (2).
    Tightening Torque: 46.5 ± 4.6 N·m (34.3 ± 3.4 lbf·ft)
11. Start the engine, set the machine in the hydraulic oil level inspection position, and check the hydraulic oil level.

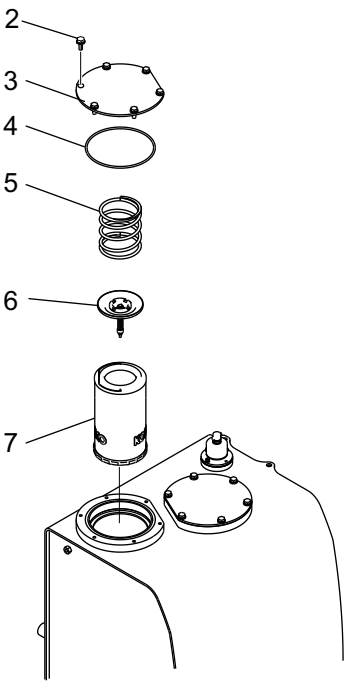

Copyright©2022 Kobelco Construction Machinery Co.,Ltd. All rights reserved. [S2LC00054ZE11] [0609CsCshWbYs]

4.16.2 REPLACING AIR BREATHER ELEMENT

CAUTION

Immediately after engine operation, the oil is hot and it may cause in burns. Wait until the oil temperature cools down before attempting to change the element.

Notice

- To keep the hydraulic oil clean and to extend the service life of the hydraulic components, replace the filter element at regular intervals.
- Every 1000 hours replacement is a rough guideline. If the machine is operated in very sandy and dusty conditions, replace the oil filter earlier than the specified interval.

1. Move the machine to a level and firm place.
2. Put the bucket on the ground.
3. Stop the engine and move the pilot control shut-off lever to the "LOCKED" position.
4. Remove breather cap (1) on the top of the hydraulic oil tank and keep pressing the valve until the pressure inside the hydraulic oil tank is released.

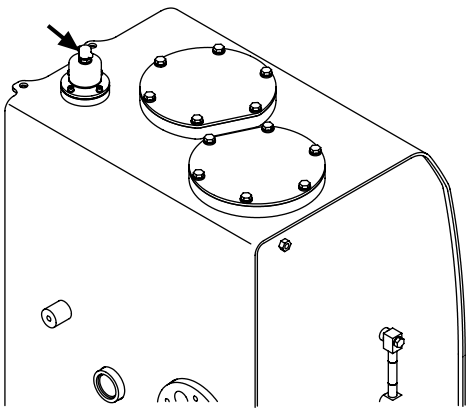

5. After removing breather cap (1), remove seal (2), nut (3) and seal (4) in order.
6. Turn cover (5) in the counterclockwise direction, remove the cover, and then remove element (6).
7. Install new element (6) and install cover (5) aligning the groove.
8. Be sure to prevent water and dirt from entering the air intake and exhaust ports between cover (5) and body (7).
9. Attach seal (4) on top of cover (5), then attach nut (3) and set seal (2).

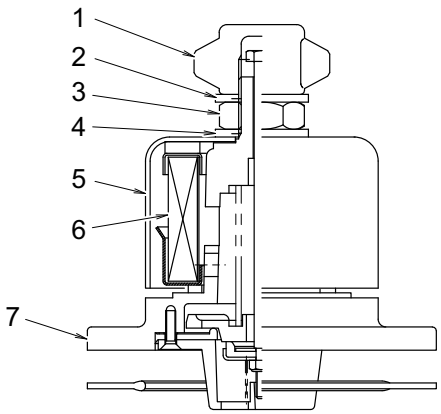

CAUTION

To avoid breakage of bolts, do not over-tighten nut (3).
Tightening Torque: 10 to 14 N·m (7.4 to 10.3 lbf·ft)

10. Securely tighten breather cap (1) clockwise by hand.

Copyright©2022 Kobelco Construction Machinery Co.,Ltd. All rights reserved. [S2LC00054ZE11] [0609CsCshWbYs]

4.16.3 CHECKING ENGINE MOUNTING BRACKET FOR TIGHTENING CONDITION

1. Check damage and deterioration of engine mounting bracket (1) and rubber mount (2) and looseness of mounting bolts (3) and nuts (4). When engine mounting bracket (1) and rubber mount (2) are damaged or deteriorated, contact your KOBELCO authorized dealer for replacement.
2. When looseness is found, tighten mounting bolts (3) and nuts (4).
   For the tightening torques, see "TIGHTENING TORQUES FOR BOLTS & NUTS (SPECIFIC POSITIONS)" in Chapter 4.

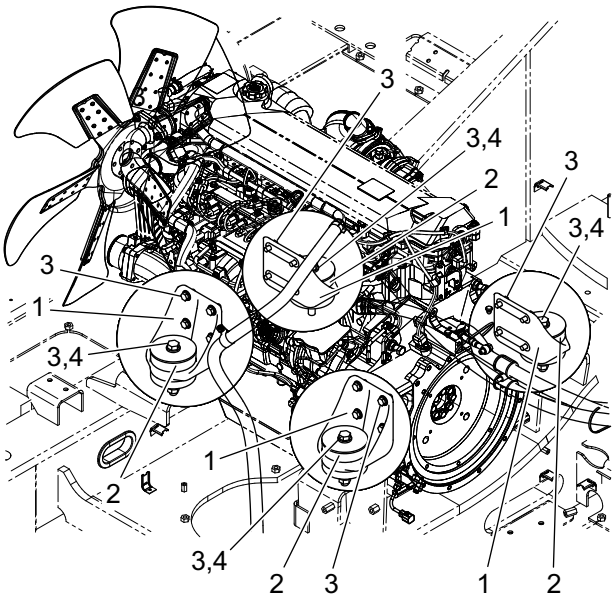

4.16.4 CHECKING BATTERY VOLTAGE

WARNING HANDLING OF BATTERY

- Wear protective glasses, long-sleeve shirt and gloves when handling the batteries.
- Do not bring a fire near the battery because the combustible hydrogen gas generated by the battery can cause explosion.
- If the dilute sulfuric acid in the battery splashes onto your skin or into your eyes, it will cause burns or blindness. At such case, immediately wash the skin or eyes with sufficient clean water, and ask a special doctor to treat it as soon as possible.
- Before performing inspection and maintenance on the battery, be sure to stop the engine.
- When removing the battery terminal be sure to remove the ground side (negative terminal) first and conversely, when attaching the battery terminal, attach the ground side last.
- Do not put tools and hardware on the protective cover on the battery upper section. It may cause a short circuit resulting in a fire or explosion.

Notice

- Clean the battery terminals and apply grease or commercial anti-rust lubricant spray.
- Do not dispose of the battery by yourself but always ask a professional service company to dispose of it.
- If the batteries became old, do not attempt to use the old battery and a new battery together. The service life of the new battery may be shortened. When replacing the batteries, replace the both at the same time.

- Measure the voltage of batteries and when it does not reach the specified voltage, charge or replace the batteries.

Copyright©2022 Kobelco Construction Machinery Co.,Ltd. All rights reserved. [S2LC00054ZE11] [0609CsCshWbYs]

4.17 2000 HOUR INSPECTION & MAINTENANCE PROCEDURES

Thoroughly read and understand "SAFETY PRECAUTIONS" of this manual before performing the inspection and maintenance.
Perform this section together with "EVERYDAY CHECK-UP and 50, 100, 120, 250, 500, and 1000 HOUR INSPECTION & MAINTENANCE PROCEDURES".

4.17.1 REPLACING COOLANT

WARNING HANDLING OF COOLANT

Do not loosen or remove the radiator cap when the coolant is under high pressure and temperature.
High temperature steam and the coolant will spout and could cause burns.

- When opening the radiator cap, wait until the coolant cools down, and then slowly turn and open the radiator cap.
- The antifreeze is flammable, so do not bring flames and sparks close to it.
- The antifreeze is poisonous, so prevent it from contacting with skin. If the antifreeze gets into your eyes or on your skin, flush the eyes or skin with plenty of water, and seek medical attention.

CAUTION

If air remains inside the coolant circuit, it will lead to damage of the machine. Perform the work according to the procedure and do not allow the air to remain inside the coolant circuit.

Notice

Use the KOBELCO genuine antifreeze at 50 % concentration. Use clean water such as tap water for the water to be mixed with the antifreeze.

- Use the specified antifreeze. If improper antifreeze is used, it will cause damage to the machine such as occurrence of rust inside the coolant circuit.
- The KOBELCO genuine antifreeze is non-amine type.
- Replace the coolant earlier than the specified interval when it is dirty and/or bubbling.

1. Move the machine to a level and firm place and lower the bucket to the ground.
2. Stop the engine and move the pilot control shut-off lever to the "LOCKED" position.
3. Loosen radiator cap (1) slowly. After checking that the pressure is completely released, push the cap down, loosen it further, and then remove it.
   Here is the radiator filler opening.
4. Remove the under cover under the radiator, place a container for drain coolant, and open drain cock (2) and drain plug (3) on the side face of the engine to drain the coolant.

Copyright©2022 Kobelco Construction Machinery Co.,Ltd. All rights reserved. [S2LC00054ZE11] [0609CsCshWbYs]

5. After draining the coolant, close drain cock (2) and drain plug (3), and prepare a hose for pouring water, and pour tap water from the radiator filler opening.

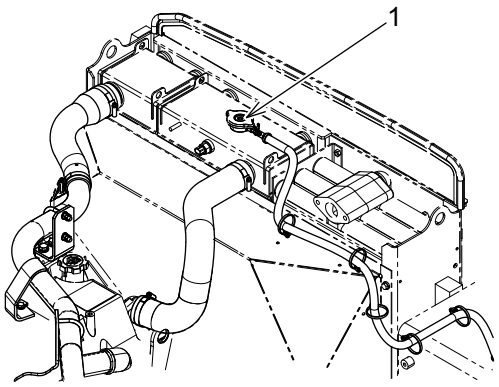

6. Open drain cock (2) and drain plug (3), and then start and run the engine with low idle for 10 minutes while washing the inside of the radiator with flowing water.
   During the washing with flowing water, regulate the volumes of water being poured to keep the water level in the radiator full.
   And also, always check the hose used for pouring water for coming off from the radiator filler opening.
7. Stop the engine and stop pouring water, and then discharge the water. After that, close drain cock (2) and drain plug (3).
8. Wash the radiator with cleaning solution. Regarding how to use the cleaning solution, follow the handling manual of the cleaning solution to be used.
9. After washing the radiator with the cleaning solution, perform washing with flowing water again according to procedures 5 to 7. At this time, continue the washing with flowing water until clean water comes out.
10. Drain the coolant inside the reserve tank (4) and wash the inside of it.

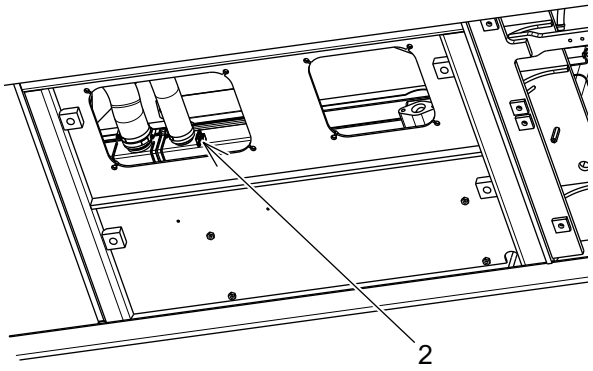

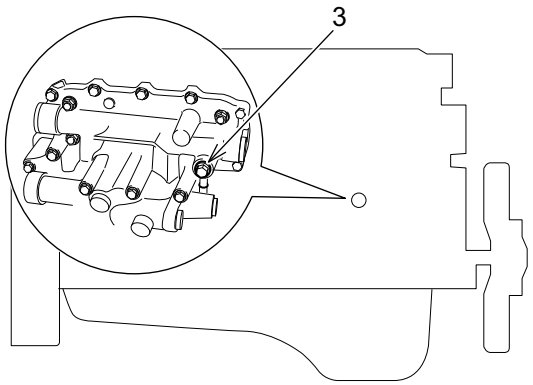

11. Pour the coolant from the radiator filler opening up to the neck of the radiator filler opening.
    At this time, to avoid intrusion of air as much as possible, slowly pour the coolant. (Speed of refiling is 4 L/min)
12. To bleed the air inside the cooling circuits, start and run the engine for 5 minute with low idle and then another 5 minutes with high idle, as stand-by operation. Perform this operation with radiator cap (1) removed.
13. Stop the engine, wait approximately 3 minutes, and then pour the coolant up to the neck of the radiator filler opening, and tighten radiator cap (1).
14. Refill the reserve tank with the coolant up to the middle between FULL (upper limit) to LOW (lower limit).

Copyright©2022 Kobelco Construction Machinery Co.,Ltd. All rights reserved. [S2LC00054ZE11] [0609CsCshWbYs]

15. Install the under cover under the radiator.
16. After the coolant cools down enough, check the coolant levels at the radiator filler opening and the reserve tank (4).
    - If the coolant level at the radiator filler opening becomes low, refill the coolant.
    - Refill the reserve tank with the coolant up to the middle between FULL (upper limit) to LOW (lower limit).

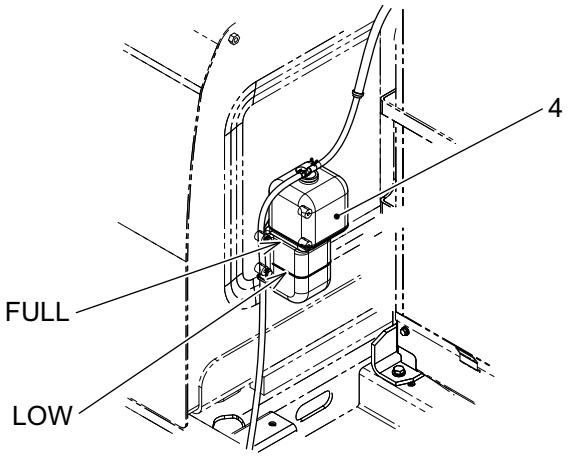

4.17.2 REPLACING OIL IN SWING REDUCTION UNIT

WARNING HANDLING OF OIL IMMEDIATELY AFTER OPERATION

Immediately after operation, the oil is hot and it may cause burns. Start working after the temperature goes down.

Notice

Replace the oil after 500 hours of operation has been reached for the first time.

Notice

- Check drain oil, and if metal chips or powder is found in the oil, contact your KOBELCO authorized dealer.
- Dispose of the drain waste oil properly as industrial waste.

1. Move the machine to a level and firm place.
2. Put the bucket on the ground.
3. Stop the engine and move the pilot control shut-off lever to the "LOCKED" position.
4. Place a container for drain oil under drain plug (1) at the rear lower part of swing reduction unit.
   Container: 7.4L (2.0Gal) or more
5. Remove drain plug (1) and drain oil in the container.
6. After draining the oil completely, clean drain plug with light oil and attach it in place.
7. Remove level gauge (2) and refill the specified gear oil to the specified quantity.
   When the oil level is within the specified range of the scale of level gauge (2), it is proper.
   For the specified gear oil, see "LUBRICANT, FUEL & COOLANT SPECIFICATIONS" in Chapter 4.
8. Attach level gauge (2).

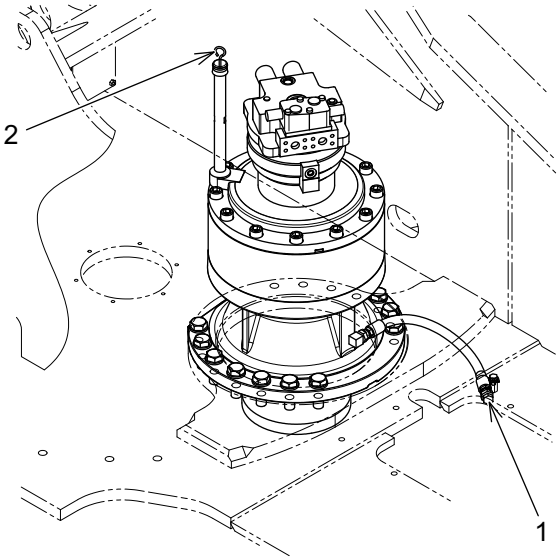

Copyright©2022 Kobelco Construction Machinery Co.,Ltd. All rights reserved. [S2LC00054ZE11] [0609CsCshWbYs]

4.17.3 REPLACING OIL IN TRAVEL REDUCTION UNITS

WARNING HANDLING OF OIL IMMEDIATELY AFTER OPERATION

- Immediately after operation, the oil is hot and it may cause burns. Start working after the temperature goes down.
- Pressure may be generated inside the traveling devices. Slowly loosen the plug to release the internal pressure.

Notice

Replace the oil after 500 hours of operation has been reached for the first time.

Notice

- Check the drain oil, and if metal chips or powder is found in the oil, contact your KOBELCO authorized dealer.
- Dispose of the drain waste oil properly as industrial waste.

1. Move the machine to a level and firm place.
2. Stop the machine at a position in which drain plug (1) is positioned at the lower side and lower the bucket to the ground.
3. Stop the engine and move the pilot control shut-off lever to the "LOCKED" position.
4. Place a container for drain oil under drain plug (1).
   Container: 8.0L (2.1 Gal) × 2 or more
5. Remove drain plug (1), level plug (2) and drain oil in container.
6. After draining the oil completely, clean drain plug (1) with light oil and attach it in place.

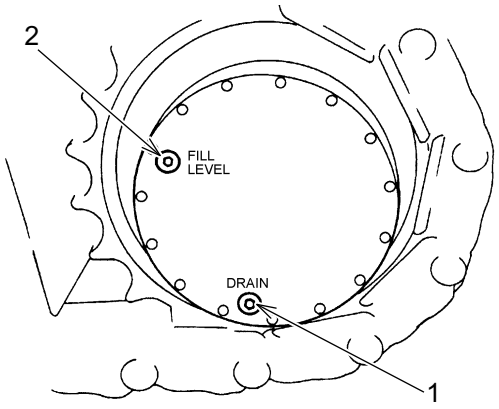

7. Fill with the specified oil in the specified quantity through hole for level plug (2) until the oil overflowed from level plug (2).
   For the specified gear oil, see "LUBRICANT, FUEL & COOLANT SPECIFICATIONS" in Chapter 4.
8. Clean level plug (2) with light oil and attach it in place.
9. Similarly, replace the oil of the travel reduction unit on the other side.

Copyright©2022 Kobelco Construction Machinery Co.,Ltd. All rights reserved. [S2LC00054ZE11] [0609CsCshWbYs]

4.17.4 CLEANING SUCTION STRAINER

WARNING HANDLING OF HYDRAULIC OIL TANK

- The oil in the hydraulic oil tank is under high pressure and high temperature.
- Before removing the cover, stop the engine first, remove the breather cap, press the valve, and release the pressure from the tank.
- Immediately after engine operation, the oil is hot and it may cause burns. Wait until the oil temperature cools down before attempting to change the hydraulic oil.

1. Move the machine to a level and firm place.
2. Park the machine in the hydraulic oil inspection position.
3. Stop the engine and move the pilot control shut-off lever to the "LOCKED" position.
4. Clean the area around the cover to keep the hydraulic oil tank away from foreign materials.

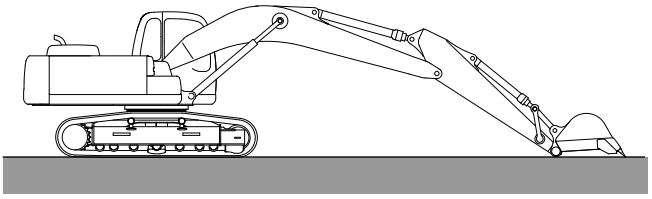

5. Remove breather cap (1) on the top of the hydraulic oil tank and press the valve several times (5 to 7 times) to release the internal pressure of the hydraulic oil tank.

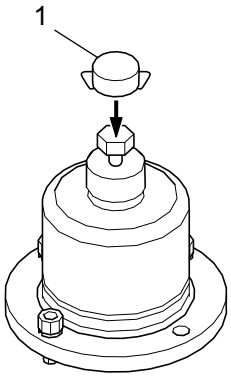

Copyright©2022 Kobelco Construction Machinery Co.,Ltd. All rights reserved. [S2LC00054ZE11] [0609CsCshWbYs]

6. Remove bolt (2) and cover (3) on the tank upper surface.

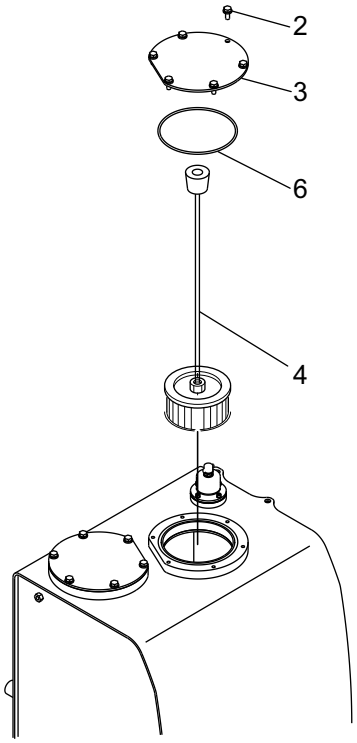

Notice

Do not drop bolts or others into the tank.

7. Take out suction strainer (4).
8. Clean suction strainer (4) with light oil or cleaning solvent, dry it well and check it for damage. If damaged significantly, replace the strainer with a new one.
   L: 796 ± 1 mm (31 ± 0.04 inch)
9. Check O-rings (5) and (6) on the bottom of the strainer, and if wear or damage is found, replace it with a new one.
10. Insert suction strainer (4) into the hydraulic oil tank.
11. Install cover (3) with bolt (2).
    Tightening Torque: 46.5 ± 4.6 N·m (34.3 ± 3.4 lbf·ft)

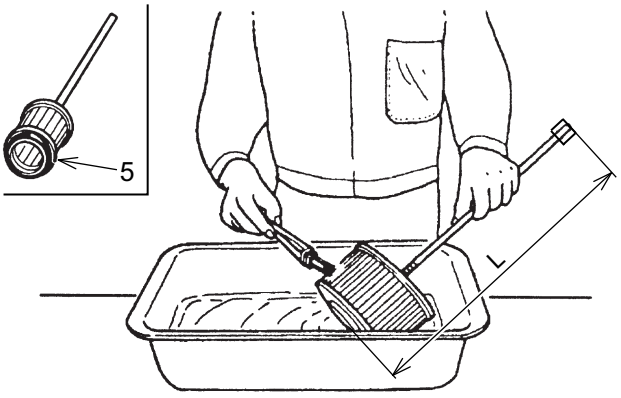

12. Start the engine, run it at low idle for several (5 to 7) minutes. After that, extend and retract each cylinder and swing the machine.
13. Park the machine in the hydraulic oil level inspection position, stop the engine and check the oil level. If the oil level is low, refill the hydraulic oil.

Copyright©2022 Kobelco Construction Machinery Co.,Ltd. All rights reserved. [S2LC00054ZE11] [0609CsCshWbYs]

4.17.5 GREASING SWING REDUCTION UNIT

WARNING HANDLING IMMEDIATELY AFTER OPERATION

Immediately after operation, each part is hot and it may cause burns. Start working after the temperature goes down.

1. Move the machine to a level and firm place.
2. Put the bucket on the ground.
3. Stop the engine and move the pilot control shut-off lever to the "LOCKED" position.
4. Apply grease to grease nipple (1).

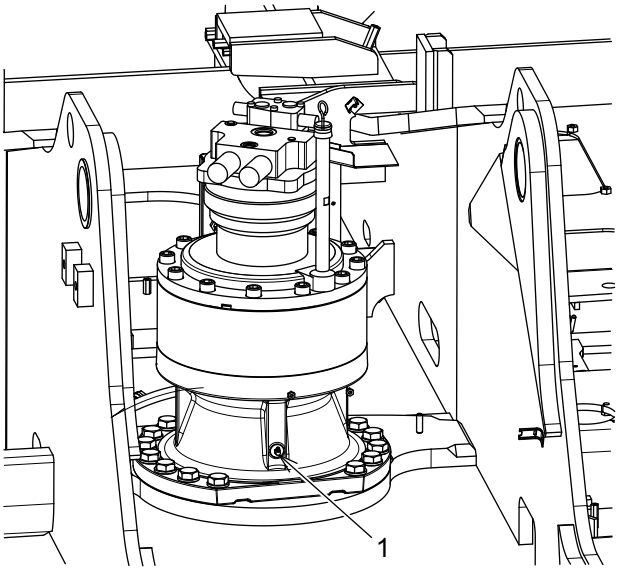

Copyright©2022 Kobelco Construction Machinery Co.,Ltd. All rights reserved. [S2LC00054ZE11] [0609CsCshWbYs]

4.17.6 CHECKING GREASE IN SWING GREASE BATH

Notice

When grease quality deteriorates, it can cause damage on the pinion shaft of the swing reduction unit and the swing bearing.
When the swing bearings gears are damaged or the grease is deteriorated and needs to be replaced, contact your KOBELCO authorized dealer.
Because the upper structure needs to be disassembled to replace grease for the swing grease bath, contact your KOBELCO authorized dealer.

1. Loosen bolt (1) at the forward side of the upper structure, and remove cover (2) and packing (3) for inspection.
2. After inspection, replace with new packing (3), and after cleaning cover (2), apply Loctite #572 and then install it.

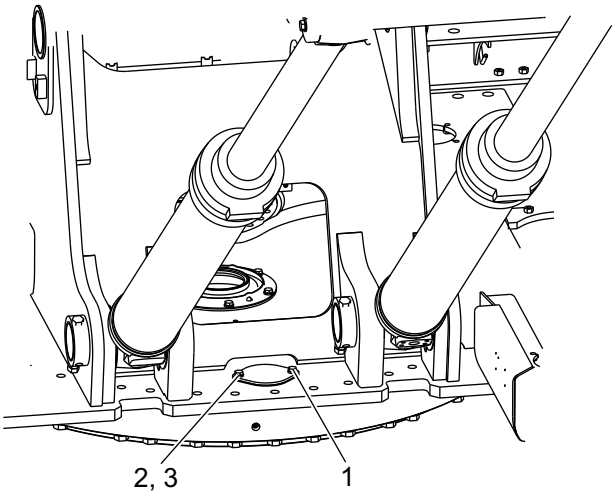

3. If water is deposited, loosen bolt (4) and spring washer (5) in the lower side of the lower frame, and remove cover (6) and packing (7) to drain the water. The grease may become clouded when mixed with a small amount of water; however, it should not cause trouble while the viscosity is high.

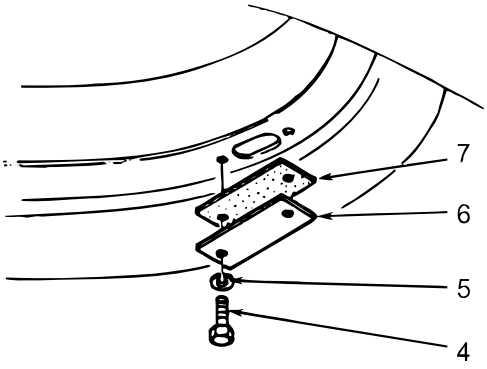

Copyright©2022 Kobelco Construction Machinery Co.,Ltd. All rights reserved. [S2LC00054ZE11] [0609CsCshWbYs]

4.17.7 CLEANING PILOT LINE FILTER

⚠CAUTION

Immediately after operation, hot hydraulic oil may spout and cause burns.
Wait until the oil temperature cools down before attempting to clean the pilot line filter.

Before performing the work, wait until the internal pressures of the hydraulic oil tank and the hydraulic system are released.

1. Open the side cover next to the pump and take out hose (1), connector (2) and line filter (3).
2. Clean line filter (3) with light oil and install it.

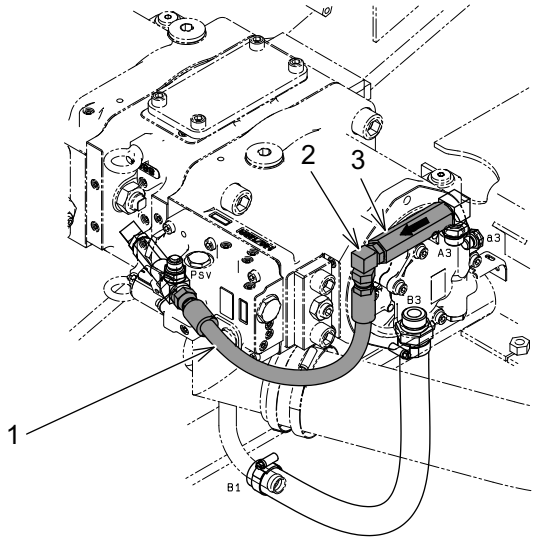

Copyright©2022 Kobelco Construction Machinery Co.,Ltd. All rights reserved. [S2LC00054ZE11] [0609CsCshWbYs]

4.18 5000 HOUR INSPECTION & MAINTENANCE PROCEDURES

Thoroughly read and understand "SAFETY PRECAUTIONS" of this manual before performing the inspection and maintenance.
Perform this section together with "EVERYDAY CHECK-UP and 50, 100, 120, 250, 500, 1000, and 2000 HOUR INSPECTION & MAINTENANCE PROCEDURES".

4.18.1 REPLACING HYDRAULIC OIL

WARNING HANDLING OF HYDRAULIC OIL TANK AND OIL

- The oil in the hydraulic oil tank is under high temperature and high pressure and it is dangerous. Before removing the cover, stop the engine first, remove the breather cap, press the valve, and release the pressure from the tank.
- Immediately after engine operation, the oil is hot and it may cause burns. Wait until the oil temperature cools down before attempting to replace the hydraulic oil.

Notice

When the hydraulic breaker is installed, the deterioration of the hydraulic oil is faster than that of the normal bucket digging work. See "PERIODIC INSPECTION AND MAINTENANCE OF NIBBLER (CRUSHER) AND BREAKER" in chapter 8 to maintain the hydraulic oil.

Notice

- Dispose of the drain waste oil properly as industrial waste.
- When using the hydraulic oil KW68, the oil should be replaced every 2000 hours.

1. Move the machine to a level and firm place.
2. Swing the upper structure so that drain plug (1) on the bottom of hydraulic oil tank is positioned to the midpoint of right and left track shoes.

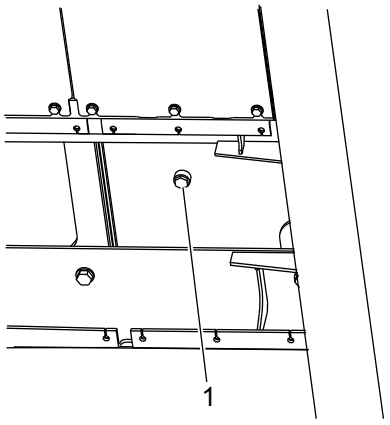

Copyright©2022 Kobelco Construction Machinery Co.,Ltd. All rights reserved. [S2LC00054ZE11] [0609CsCshWbYs]

3. Retract the arm cylinder and bucket cylinder and place the bucket and dozer (if equipped) on the ground.
4. Stop the engine and move the pilot control shut-off lever to the "LOCKED" position.
5. Clean the surface around the cover to keep foreign materials away from the hydraulic oil tank.

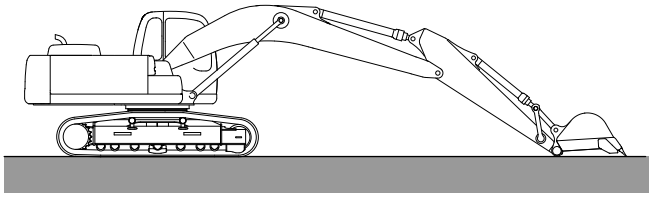

6. Remove breather cap (2) on the top of the hydraulic oil tank and press the valve several times (5 to 7 times) to release the internal pressure of the hydraulic oil tank.

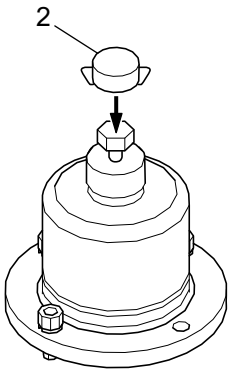

7. Remove bolt (3) and cover (4) on the tank upper surface.

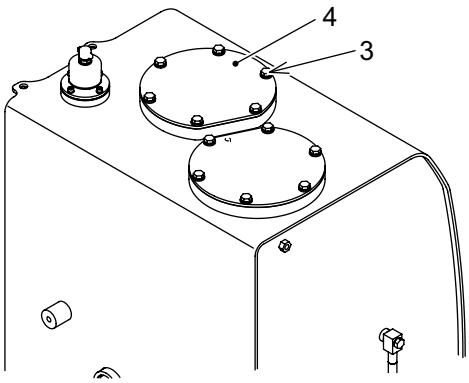

Notice

Do not drop bolts or others into the tank.

8. Place a container for drain oil under drain plug (1) on the bottom of the hydraulic oil tank.
9. Loosen drain plug (1) slowly and drain hydraulic oil completely.
10. Clean drain plug (1) and install it in place.
Tightening Torque: 108 ± 10 N·m (79.7 ± 7.4 lbf·ft)

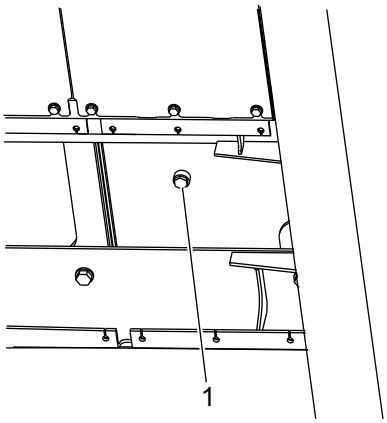

Copyright©2022 Kobelco Construction Machinery Co.,Ltd. All rights reserved. [S2LC00054ZE11] [0609CsCshWbYs]

11. Refill hydraulic oil through filler port on the top of the hydraulic oil tank.
    Pour the oil while checking the oil level with level gauge (G).
12. Attach filler port cover (4) with six bolts (3).
    Tightening torque: 46.5 ± 4.6 N･m (34.3 ± 3.4 lbf･ft)
13. Start the engine, run it at low idle for several (5 to 7) minutes. After that, extend and retract each cylinder and swing the machine.
14. Set the machine in the hydraulic oil level inspection again, stop the engine and check the oil level. If the oil level is low, refill the hydraulic oil.

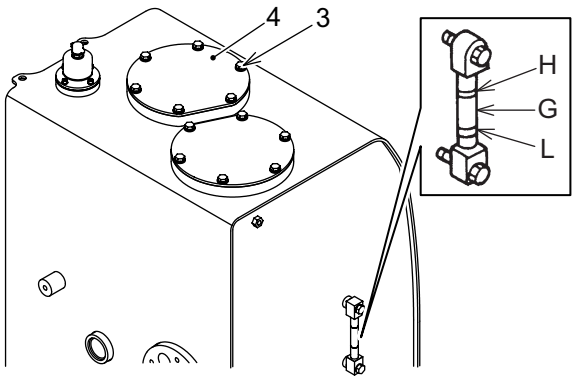

Copyright©2022 Kobelco Construction Machinery Co.,Ltd. All rights reserved. [S2LC00054ZE11] [0609CsCshWbYs]

5. TRANSPORTATION

Copyright©2022 Kobelco Construction Machinery Co.,Ltd. All rights reserved. [S2LC00054ZE11] [0609CsCshWbYs]

Copyright©2022 Kobelco Construction Machinery Co.,Ltd. All rights reserved. [S2LC00054ZE11] [0609CsCshWbYs]

5.1 TRANSPORTATION

When transporting the machine, observe the transportation related regulations and transport the machine dealer.

5.1.1 STRICTLY OBSERVE TRANSPORTATION RELATED REGULATIONS

When performing transportation, contact the nearest KOBELCO branch or sales office.

- When transporting this machine with a trailer, etc., consider the width, height, length and mass of the machine. The transportation mass and dimension vary depending on the type of shoe and the specifications of the attachment.
- Refer to masses and dimensions described in "SPECIFICATIONS" and "OPTIONAL EQUIPMENT" in this manual to select the proper transportation method.
- Perform a previous inspection on the route such as limitations on width, height and mass (weight) of vehicles and traffic regulations, etc.

WARNING CONTROL PATTERNS OF THE CONTROL LEVERS

Before operation, be sure to pay attention to the surroundings and operate each control lever slowly and confirm that each motion is in accordance with the control pattern indicated on the label. When it is not matched, replace the label with the proper label matching with the actual motion.
In addition, see "PRECAUTIONS FOR OPERATIONS" in Chapter 1 for precautions regarding operations.

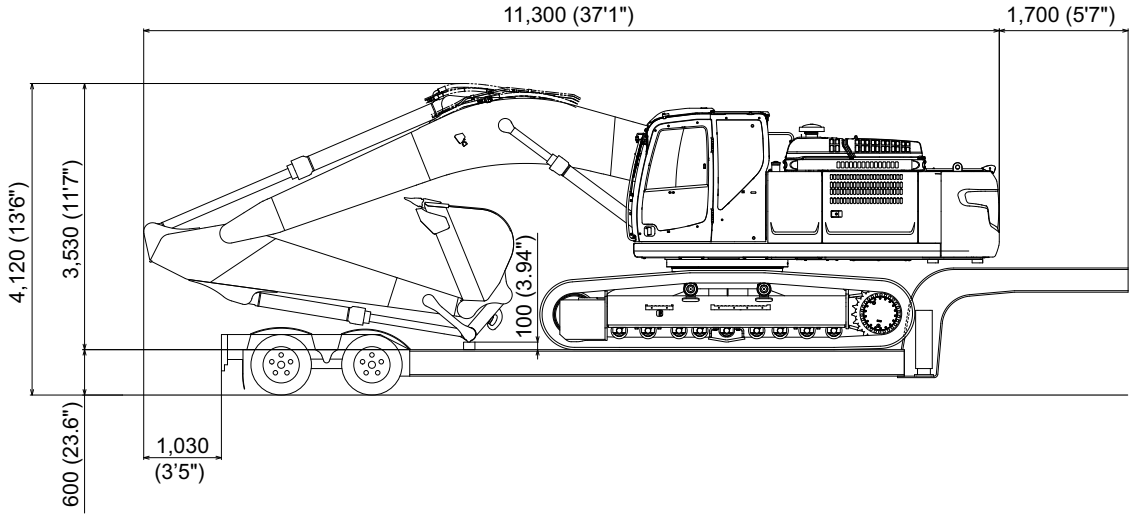

The dimensions and weight are 3.30 m (10'-10") for the arm, 1.4 m^3(1.83 cu·yd) bucket, and 6.50 m (21'-4") boom specification.

MODEL	OPERATING MASS		
	600 mm (2'-1")	700 mm (2'-4")	800 mm (2'-7")
SK330-10	35,200 kg (77,600 lbs)	36,300 kg (80,000 lbs)	36,700 kg (80,900 lbs)
SK350LC-10	35,900 kg (79,200 lbs)	36,800 kg (81,100 lbs)	37,200 kg (82,000 lbs)

Copyright©2022 Kobelco Construction Machinery Co.,Ltd. All rights reserved. [S2LC00054ZE11] [0609CsCshWbYs]

HIGH & WIDE

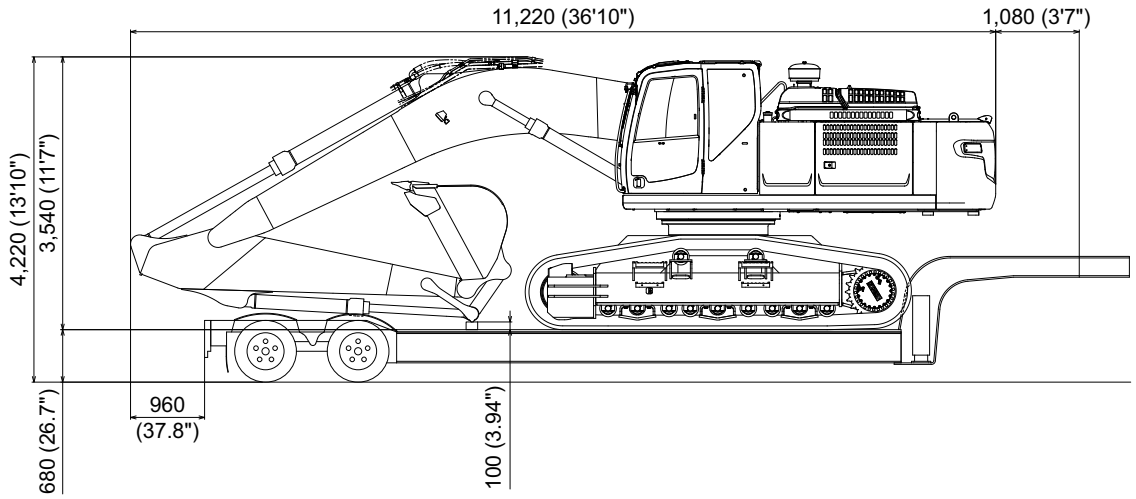

The dimensions and weight are 3.30 m (10'-10") for the arm, 1.4 m^3(1.83 cu·yd) bucket, and 6.50 m (21'-4") boom specification.

MODEL	OPERATING MASS	
	600 mm (23.6")	700 mm (27.6")
SK350LC-10	38,600 kg (85,100 lbs)	39,100 kg (86,200 lbs)

Copyright©2022 Kobelco Construction Machinery Co.,Ltd. All rights reserved. [S2LC00054ZE11] [0609CsCshWbYs]

5.2 LOADING/UNLOADING THE MACHINE

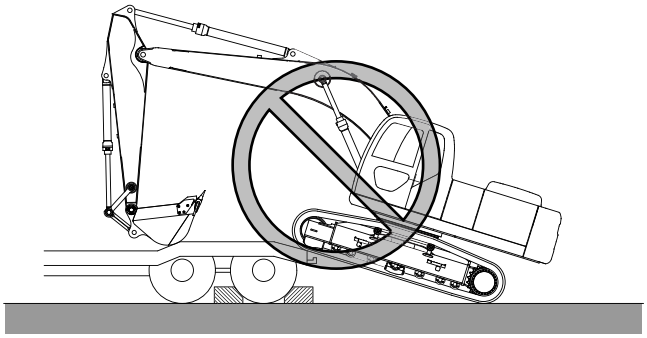

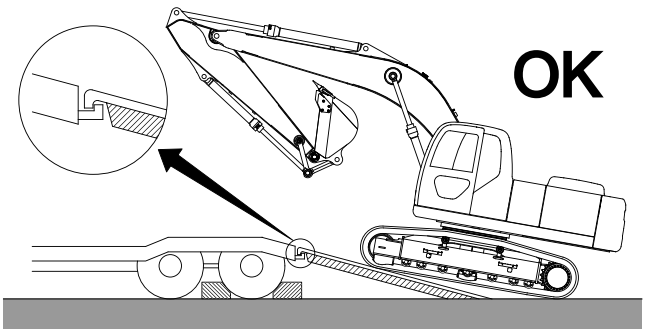

WARNING Loading/unloading the machine

- Load/unload the machine on a level and hard ground.
- Use ramps, platforms, and embankment with sufficient width, length, slope, rigidity, and strength.
- Remove mud and dirt of the undercarriage to prevent the machine from skidding on the ramp. In addition, remove any deposit on the ramp including water, snow, ice, grease, and oil.
- When loading or unloading the machine, set engine speed to LOW and travel speed select switch to LOW (1st) speed.
- Do not use the attachment for loading and unloading the machine to avoid danger.
- Use only the travel levers when the machine is on ramps.
- When going over the ramp top to/from a trailer, the machine may lose balance due to an abrupt change in the center of gravity. Be sure to travel slowly.
- Be sure to turn the auto acceleration switch to the "OFF" position. When the machine is operated with the auto acceleration turned to the "ON" position, the engine speed may change abruptly.
- Do not make a turn on the ramp to avoid tipping. Make a turn after returning to the ground or the trailer bed.
- When the machine is going down a slope or being loaded on or unloaded from the trailer, set the LOW (1st)/ HIGH (2nd) travel speed select switch to LOW.
  Since the LOW (1st)/HIGH (2nd) automatic travel speed select switching system automatically changes the traveling speed, it may adversely affect machine control when the machine is going down a slope or being loaded on or unloaded from the trailer. This abrupt change of machine control may cause severe accidents.

Copyright©2022 Kobelco Construction Machinery Co.,Ltd. All rights reserved. [S2LC00054ZE11] [0609CsCshWbYs]

5.2.1 LOADING

Use the following procedure.

WHEN USING A RAMP

1. Chock the trailer tires to prevent the trailer from moving.
2. Use a ramp with sufficient length, width, strength and gradient. Install the ramp so its angle (A) to the ground is 15 degrees or less.
3. Start the engine, and move down the control lock lever to the "UNLOCKED" position.
4. On the switch panel on the gauge cluster, press the travel speed select switch to set it to the LOW (1st) speed.
5. Make sure the machine position is aligned to the ramp before going up on the ramp, raise the dozer (if installed), and travel slowly.

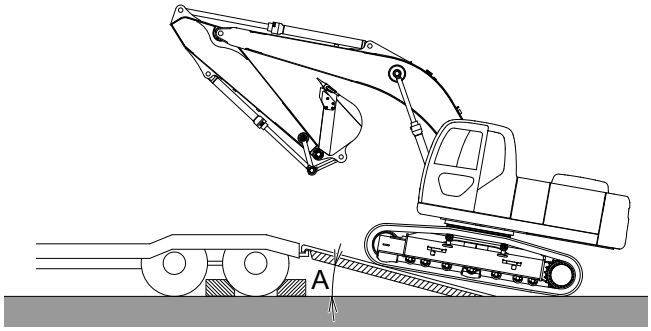

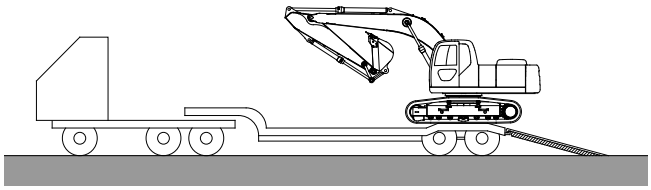

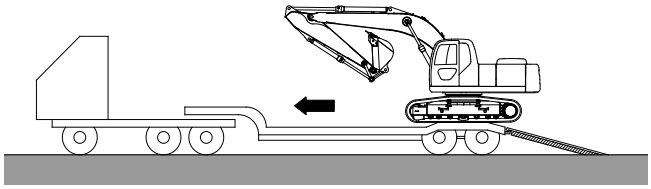

⚠CAUTION

When this machine is traveling up or down the ramp, fold the arm and attachment and raise the boom to avoid interference with the ramp or trailer bed, as shown in the figure.
When the clearance between the ramp or the trailer bed is insufficient, the machine may abruptly lean to one side when it goes over the ramp top, and strike its arm or bucket cylinder against the trailer bed, ramp, or ground, resulting in damage to the cylinder.

6. When the machine comes to the required position, slowly swing the upper structure 180 degrees.
7. Lower the attachment/equipment slowly.
8. Move the control lock lever to the "LOCKED" position.
9. Perform cool-down operation with the engine in the low idle position, and then stop the engine and remove the starter key.

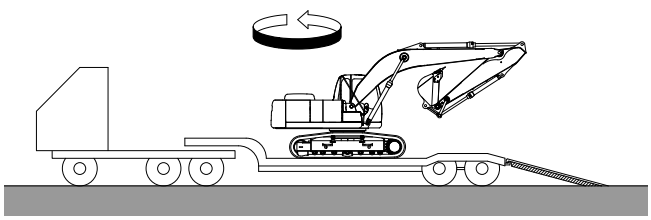

Copyright©2022 Kobelco Construction Machinery Co.,Ltd. All rights reserved. [S2LC00054ZE11] [0609CsCshWbYs]

10. Lock the lock devices such as guards and doors.

WHEN USING PLATFORM OR EMBANKMENT

1. Make the embankment wide enough to the machine width. The angle (A) of the platform or embankment to the ground should be 15 degrees or less.
2. Check that the embankment is sufficiently sturdy to hold the machine weight.
3. The surface of the platform or embankment must be level to that of the trailer bed.
4. Park the trailer properly at the required position.

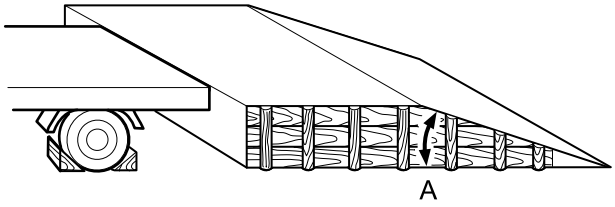

LOADING A MACHINE WITHOUT ATTACHMENT/EQUIPMENT

WARNING DO NOT SWING

Do not swing the machine during loading and unloading the machine.
It may cause the machine to tip/roll over to the counterweight side.

- When loading a machine without an attachment/ equipment, adjust the travel direction so the counterweight comes to the top of the slope.

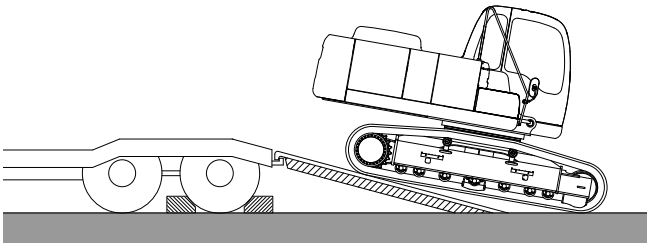

5

Copyright©2022 Kobelco Construction Machinery Co.,Ltd. All rights reserved. [S2LC00054ZE11] [0609CsCshWbYs]

5.2.2 FIXING THE MACHINE

Notice

- Retract the radio antenna in before transportation. In addition, remove the mirrors if required. Store the removed parts securely in the cab.
- Place a wood block under the bucket (attachment) link to avoid contacting the ground and protect the bucket cylinder from being damaged during transportation.

After loading the machine on the required position, fix the machine by the following procedures.

CRAWLER

1. Check that all guards and doors are locked.
2. Chock the front and rear of the crawlers and fix the machine securely with wire ropes of appropriate strength to prevent the body from moving back and forth or rolling by vibration of the trailer. In addition, secure individual parts and removed parts securely on the trailer.

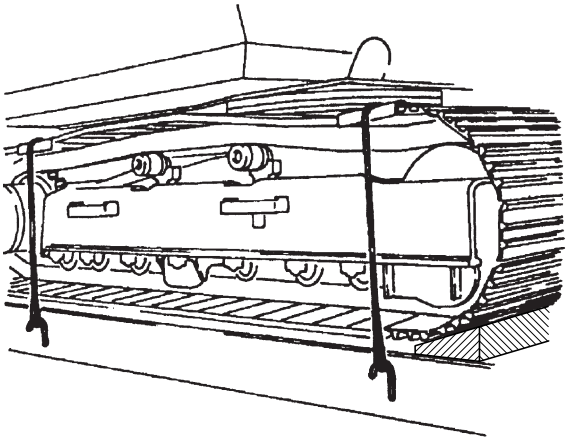

CAUTION

In the HIGH & WIDE track guide specification, the track guides have holes to be used for assembling. When fixing the machine, do not use these holes.

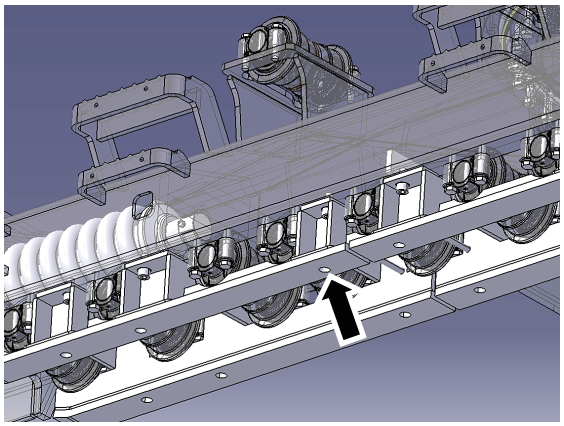

Copyright©2022 Kobelco Construction Machinery Co.,Ltd. All rights reserved. [S2LC00054ZE11] [0609CsCshWbYs]

RUBBER CRAWLER AND PAD SHOE

1. Check that all guards and doors are locked.
2. Chock the front and rear of the crawlers and fix the machine securely with wire ropes of appropriate strength to prevent the body from moving back and forth or rolling by the vibration of the trailer. In addition, secure individual parts and removed parts securely on the trailer.
   Do not directly apply the wire rope (1) on the rubber crawler or the pad shoe. Place pads (2) (such as soft cloth) at the left and right of the crawler frame to fix the rope securely on the loading platform of the truck.

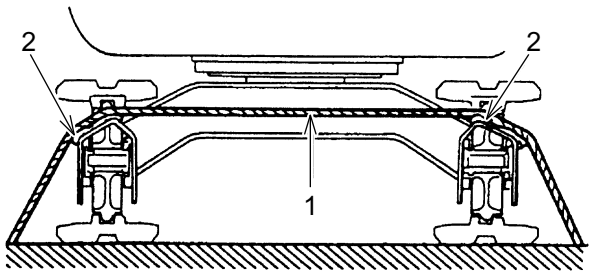

Copyright©2022 Kobelco Construction Machinery Co.,Ltd. All rights reserved. [S2LC00054ZE11] [0609CsCshWbYs]

5.2.3 UNLOADING

Use the following procedure.

1. Chock the trailer tires to prevent the trailer from moving.
2. Use ramps with sufficient length, width, strength and gradient. Attach the ramps so its angle (A) to the ground is 15 degrees or less.
3. Remove chains or wire ropes that have been fixing the machine.
4. Start the engine, and move down the pilot control shut-off lever to the "UNLOCKED" position.
5. On the switch panel on the gauge cluster, press the travel speed select switch to set it to the LOW (1st) speed.
6. Raise the boom slowly.
7. Raise the attachment. With the arm retracted to under the boom, raise the dozer (if equipped) and travel slowly.
8. Level the machine at the rear end of the trailer and stop temporarily.
9. Make sure the machine position is alighted parallel to the ramps, and adjust the angle between the arm and boom to 80 to 100 degrees.

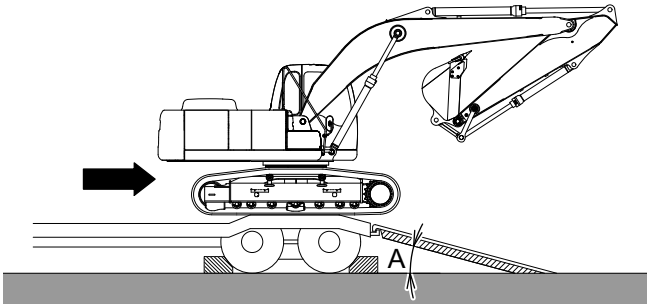

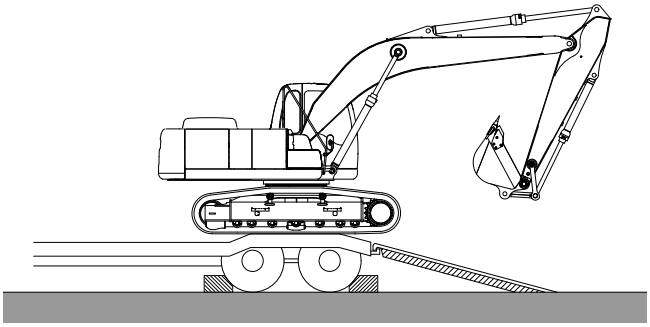

⚠CAUTION

When this machine is traveling up or down the ramp, fold the arm and attachment and raise the boom to avoid interference with the ramp or trailer bed, as shown in the figure.
When the clearance between the ramp or the trailer bed is insufficient, the machine may abruptly lean to one side when it goes over the ramp top, and strike its arm or bucket cylinder against the trailer bed, ramp, or ground, resulting in damage to the cylinder.

10. Until the machine completely passes through the ramps, travel down the ramps slowly with moving the boom and the arm slowly to keep the bucket close to the ground so that it can be lowered to the ground in an emergency.
11. Slowly swing the upper structure 180 degrees to take the front traveling position (so the travel reduction unit comes to the rear).

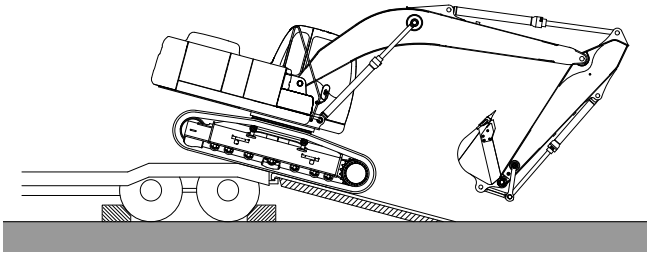

Copyright©2022 Kobelco Construction Machinery Co.,Ltd. All rights reserved. [S2LC00054ZE11] [0609CsCshWbYs]

5.3 MACHINE LIFTING

WARNING MACHINE LIFTING

- Wire ropes or other lifting tools used should have no damage nor deterioration, but have sufficient strength and length.
- With improper method of lifting and placing wire ropes, the lifted machine may move, causing personal injury or damage to the machine.
- Be careful not to apply a load suddenly to the wire ropes and the lifting tools.
- When lifting the machine, evacuate from the areas surrounding the machine. At the time of lifting, unexpected movement of the machine can occur.
- During the machine lifting operation, keep away from the area around and under the machine.
- When lifting the machine as a group work, surely send and receive signals to each other.
- Do not lift the machine with a worker on it.
- Keep the machine horizontal when lifting it.

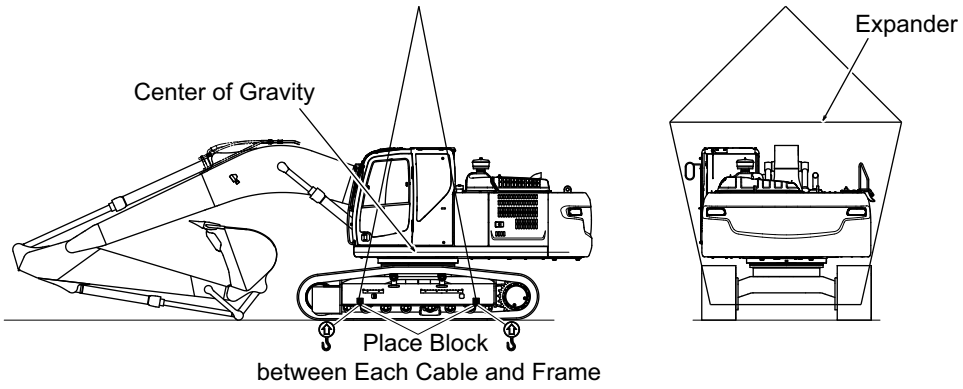

WITH ATTACHMENT/EQUIPMENT (HIGH & WIDE)

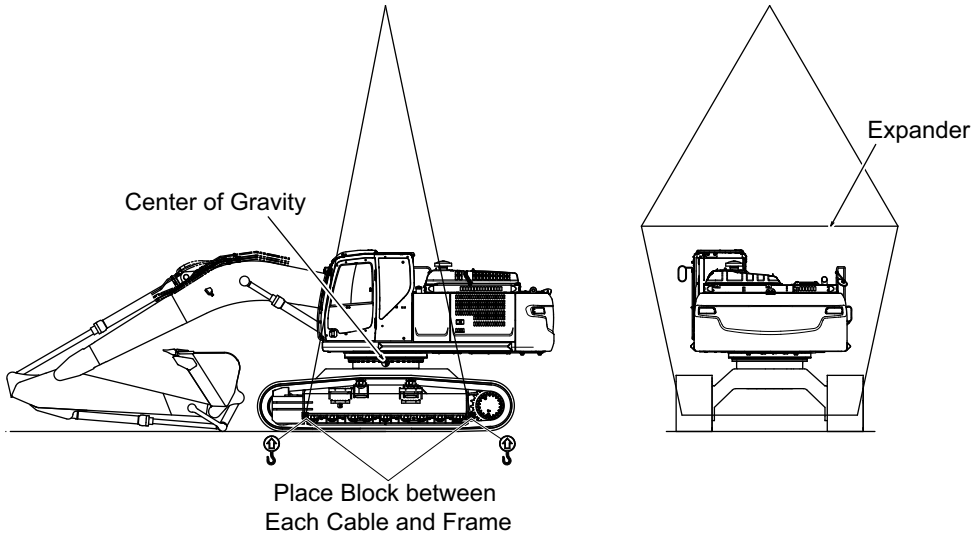

Copyright©2022 Kobelco Construction Machinery Co.,Ltd. All rights reserved. [S2LC00054ZE11] [0609CsCshWbYs]

WITHOUT ATTACHMENT/EQUIPMENT (HIGH & WIDE)

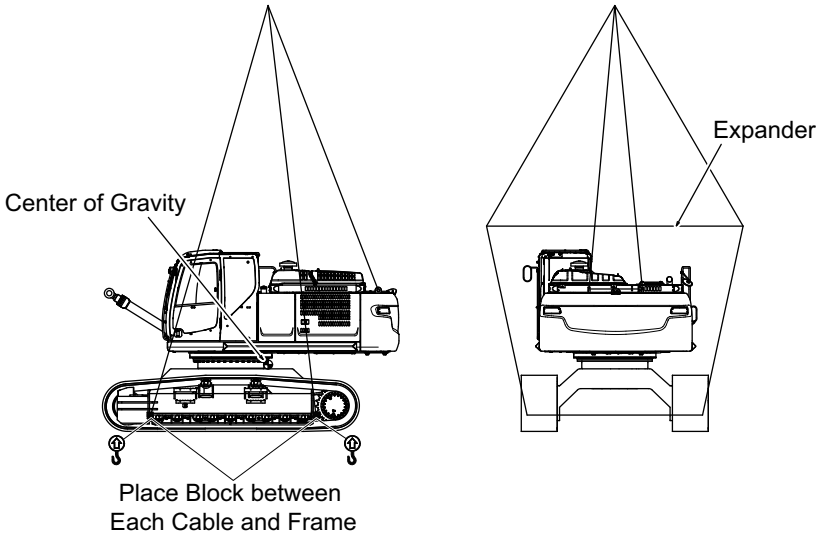

Notice

- This lifting procedures are applicable for machines in a standard specification.
  In the actual lifting operation, the weight and center of gravity of the machine as well as the strength of the wire ropes and sling jigs must be checked. For details, contact KOBELCO or your KOBELCO authorized dealer.
- Use wire ropes and sling jigs with a sufficient length to avoid contact with the machine during the lifting operation.
- When necessary, cover the wire ropes with a cloth or pad to protect the machine body from damage.

CAUTION

In the HIGH & WIDE track guide specification, the track guides have holes to be used for assembling. When lifting the whole machine, do not use these holes.

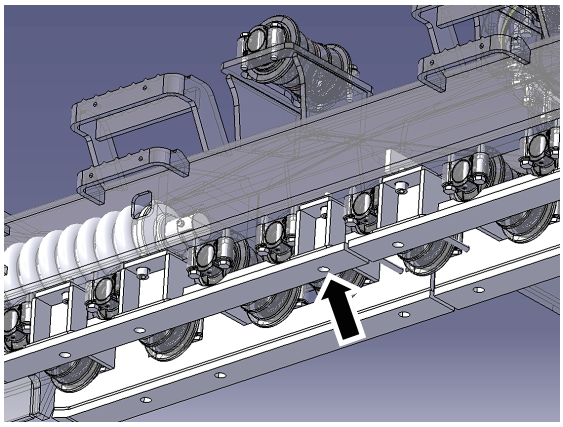

Copyright©2022 Kobelco Construction Machinery Co.,Ltd. All rights reserved. [S2LC00054ZE11] [0609CsCshWbYs]

5.3.1 LIFTING PROCEDURES

1. Move the machine to a level place.
2. Fully extend the arm cylinder and the bucket cylinder of the attachment/equipment, and lower the boom to place the attachment/equipment on the ground.
3. Align the orientation of the cab and the crawlers in parallel.
4. Move the pilot control shut-off lever to the "LOCKED" position, stop the engine, and pull out the starter key.
5. Close the front window and the window glasses of the cab, the cab door, the left and right side doors, and the engine hood and then lock them.
6. Pass the wire ropes through the spaces between the first lower roller and the second lower roller at the front and rear sides of the machine.
7. Adjust the sling angle of the wire rope to 20 to 30 degrees and then lift the machine.
8. Lift the machine and after the machine leaves the ground, stop the movement, wait until the machine is stabilized, and then slowly lift up the machine.

Copyright©2022 Kobelco Construction Machinery Co.,Ltd. All rights reserved. [S2LC00054ZE11] [0609CsCshWbYs]

5.4 INSTALLING AND REMOVING MIRROR

When the machine is shipped from a factory, the mirrors are not installed.
When removing and installing the mirrors, see “ADJUSTMENT OF MIIRRORS” in Chapter 3.

Copyright©2022 Kobelco Construction Machinery Co.,Ltd. All rights reserved. [S2LC00054ZE11] [0609CsCshWbYs]

6. SPECIFICATION

Copyright©2022 Kobelco Construction Machinery Co.,Ltd. All rights reserved. [S2LC00054ZE11] [0609CsCshWbYs]

Copyright©2022 Kobelco Construction Machinery Co.,Ltd. All rights reserved. [S2LC00054ZE11] [0609CsCshWbYs]

6.1 GENERAL SPECIFICATIONS

6.1.1 SK330-10, SK350LC-10

	Item	Unit	SK330–10	SK350LC-10	SK350LC-10 (HIGH & WIDE)
	Operating mass	kg	35,200 (77,600)	35,900 (79,200)	38,600 (85,100)
	Bucket capacity	m^3	1.40 (1.83)	1.40 (1.83)	1.40 (1.83)
	Engine name	-	HINO J08E-TM diesel engine		
	Engine rated power	kW/min^{-1}	209 / 2,100	209 / 2,100	209 / 2,100
A	Overall length	mm	11,300 (37'1")	11,300 (37'1")	11,170 (36'8")
B	Overall height	mm	3,420 (11'3")	3,420 (11'3")	3,480 (11'5")
C	Overall width	mm	3,190 (10'6")	3,190 (10'6")	3,650 (11'12")
D	Track shoe width (Grouser shoe)	mm	600 (23.6")	600 (23.6")	600 (23.6")
E	Cab height	mm	3,200 (10'6")	3,200 (10'6")	3,480 (11'5")
F	Minimum ground clearance (excluding lug height)	mm	500 (19.7")	500 (19.7")	785 (30.9")
G	Tail swing radius	mm	3,600 (11'10")	3,600 (11'10")	3,600 (11'10")
H	Crawler overall length	mm	4,630 (15'2")	4,960 (16'3")	5,010 (16'5")
I	Tumbler center distance	mm	3,720 (12'2")	4,050 (13'3")	4,050 (13'3")
J	Clearance height under upper structure (excluding lug height)	mm	1,190 (3'11")	1,190 (3'11")	1,510 (4'11")
K	Overall width of upper structure	mm	2,980 (9'9")	2,980 (9'9")	2,980 (9'9")
L	Crawler overall width	mm	3,190 (10'6")	3,190 (10'6")	3,650 (11'12")
	Ground contact pressure	kPa	71 (10.3)	67 (9.7)	72 (10.4)
	Swing speed	min^{-1}	10.0 (10.0)	10.0 (10.0)	10.0 (10.0)
	Travel speed (low/high)	km/h	3.6 / 5.8 (2.2 / 3.6)	3.6 / 5.8 (2.2 / 3.6)	3.6 / 5.8 (2.2 / 3.6)
	Gradeability	% (deg)	70 (35)	70 (35)	70 (35)

Notice

General specifications indicate the specifications of standard machine with the 6.50 m (21'4") boom and the 3.30 m (1010") arm.
Bucket capacity is indicated by ISO.

Copyright©2022 Kobelco Construction Machinery Co.,Ltd. All rights reserved. [S2LC00054ZE11] [0609CsCshWbYs]

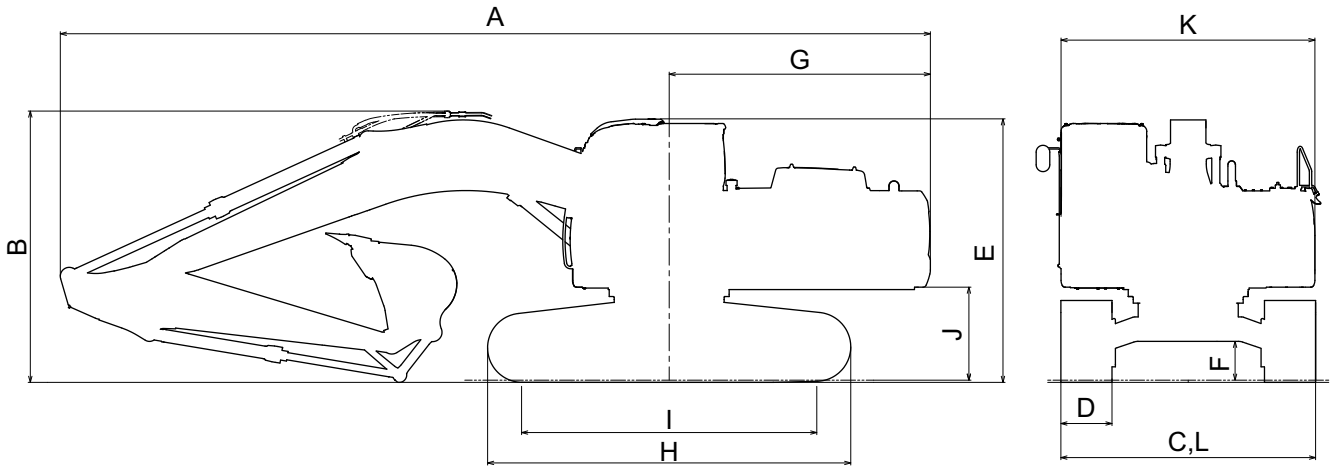

Copyright©2022 Kobelco Construction Machinery Co.,Ltd. All rights reserved. [S2LC00054ZE11] [0609CsCshWbYs]

6.2 SHOE TYPES AND USES

Notice

- Never use the shoes other than the grouser shoe of 600mm (23.6") in barren (a field with a lots of rocks and gravel).
  Never use the machine of the HIGH & WIDE specification in barrens regardless of the kinds of the shoes.
  Traveling and digging work in barren could cause bent shoes and loose shoe bolts and may also damage other travel system components (link, roller, etc.).
- The attachment is with a 3.30m(10'10") arm and a 1.40m^3(1.83cu·yd) (heaped) bucket.
- The dimensions marked with * do not include height of shoe lug.

6.2.1 SK330-10

Type		Grouser shoe		
		600 (23.6")	700 (27.6")	800 (31.5")
Use		For ordinary soil	For soft soil	For soft soil
		(Option)	(Option)	(Standard)
Body specification	Operating mass kg (lb)	35,200 (77,600)	36,300 (80,000)	36,700 (80,900)
	Machine mass kg (lb)	26,700 (58,900)	27,700 (61,100)	28,100 (62,000)
	Cab height mm (ft-in)	3,200 (10'6")	←	←
	*Minimum ground clearance mm (inch)	500 (19.7")	←	←
	Crawler overall length mm (ft-in)	4,630 (15'2")	←	←
	Crawler overall width mm (ft-in)	3,190 (10'6")	3,290 (10'10")	3,390 (11'1")
	Ground contact pressure kPa (psi)	71 (10.3)	63 (9.1)	56 (8.1)

Copyright©2022 Kobelco Construction Machinery Co.,Ltd. All rights reserved. [S2LC00054ZE11] [0609CsCshWbYs]

6.2.2 SK350LC-10

Type		Grouser shoe		
		600 (23.6")	700 (27.6")	800 (31.5")
Use		For ordinary soil	For soft soil	For soft soil
		(Option)	(Option)	(Standard)
Body specification	Operating mass kg (lb)	35,900 (79,200)	36,800 (81,100)	37,200 (82,000)
	Machine mass kg (lb)	27,300 (60,200)	28,200 (62,200)	28,600 (63,100)
	Cab height mm (ft-in)	3,200 (10'6")	←	←
	*Minimum ground clearance mm (inch)	500 (19.7")	←	←
	Crawler overall length mm (ft-in)	4,960 (16'3")	←	←
	Crawler overall width mm (ft-in)	3,190 (10'6")	3,290 (10'10")	3,390 (11'1")
	Ground contact pressure kPa (psi)	67 (9.7)	59 (8.6)	52 (7.5)

6.2.3 SK350LC-10(HIGH & WIDE)

Type		Grouser shoe	
		600 (23.6")	700 (27.6")
Use		For ordinary soil	For soft soil
		(Option)	(Option)
Body specification	Operating mass kg (lb)	38,600 (85,100)	39,100 (86,200)
	Machine mass kg (lb)	30,200 (66,600)	30,700 (67,700)
	Cab height mm (ft-in)	3,480 (11'5")	←
	*Minimum ground clearance mm (inch)	785 (30.9")	←
	Crawler overall length mm (ft-in)	5,010 (16'5")	←
	Crawler overall width mm (ft-in)	3,650 (11'12")	3,750 (12'4")
	Ground contact pressure kPa (psi)	72 (10.4)	62 (9.0)

Copyright©2022 Kobelco Construction Machinery Co.,Ltd. All rights reserved. [S2LC00054ZE11] [0609CsCshWbYs]

6.3 WORKING RANGES

6.3.1 BACKHOE ATTACHMENT

SK330-10, SK350LC-10

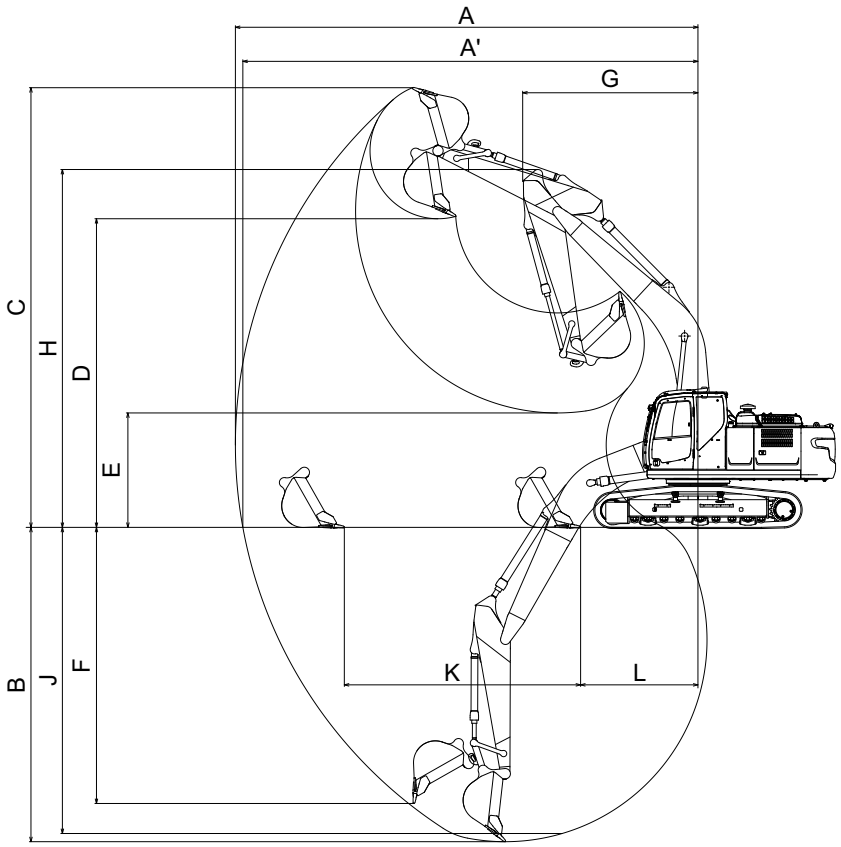

Item			Types of Attachment 3.30 m (10'10") Standard Arm 1.40m³ (1.83 cu·yd) Bucket
A	Maximum digging reach		11,260 (36'11")
A'	Maximum reach at ground reference plane		11,060 (36'3")
*B	Maximum digging depth		7,560 (24'10")
*C	Maximum height of cutting edge		10,580 (34'9")
*D	Maximum dumping height		7,370 (24'2")
*E	Minimum dumping height		2,620 (8'7")
*F	Vertical digging depth		6,610 (21'8")
G	Minimum swing radius		4,310 (14'2")
*H	Height at minimum swing radius		8,640 (28'4")
*J	Eight feet level digging depth		7,400 (24'3")
K	Horizontal digging stroke at ground level	Stroke	5,820 (19'1")
L		At minimum	2,700 (8'10")

Notice

The dimensions marked with * do not include height of shoe lug.

Copyright©2022 Kobelco Construction Machinery Co.,Ltd. All rights reserved. [S2LC00054ZE11] [0609CsCshWbYs]

SK350LC–10 (HIGH & WIDE)

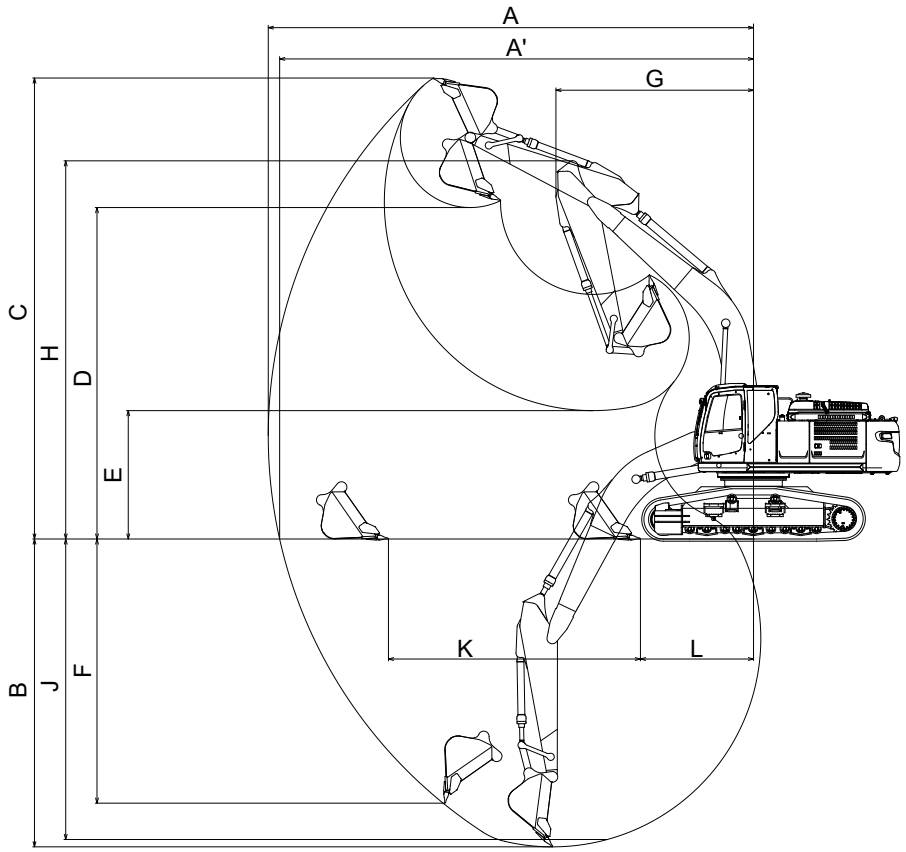

Item			Types of Attachment 3.30 m (10'10") Standard Arm 1.40m³ (1.83 cu·yd) Bucket
A	Maximum digging reach		11,260 (36'11")
A'	Maximum reach at ground reference plane		11,000 (36'1")
*B	Maximum digging depth		7,240 (23'9")
*C	Maximum height of cutting edge		10,900 (35'9")
*D	Maximum dumping height		7,680 (25'2")
*E	Minimum dumping height		2,940 (9'8")
*F	Vertical digging depth		6,290 (20'8")
G	Minimum swing radius		4,310 (14'2")
*H	Height at minimum swing radius		8,960 (29'5")
*J	Eight feet level digging depth		7,080 (23'3")
K	Horizontal digging stroke at ground level	Stroke	5,870 (19'3")
L		At minimum	2,620 (8'7")

Notice

The dimensions marked with * do not include height of shoe lug.

Copyright©2022 Kobelco Construction Machinery Co.,Ltd. All rights reserved. [S2LC00054ZE11] [0609CsCshWbYs]

6.4 ATTACHMENT TYPE AND COMBINATION

6.4.1 FRONT ATTACHMENT VARIATION

To handle various types of work, this machine is provided with various attachments/equipment.

- When a bucket with large capacity is used, it should be used in combination with a short arm so that the machine is stabilized and excessive load to the front part and the cylinders can be avoided.
- When a long boom or arm is used, it should be used in combination with a bucket with small capacity.

6.50m (21'4") BOOM SPECIFICATION AND BUCKET COMBINATION

Type	Bucket Capacity (m^3)(cu·yd)		Bucket Width (mm)		Number of Teeth	Mass (kg)	ARM		
	SAE (Heaped)	SAE (Struck)	With Side Cutter	Without Side Cutter			2.60m	3.30m	4.15m
Hoe bucket	1.20 (1.57)	0.84 (1.10)	1.240	1,110	4	930	○	○	○
	1.40 (1.83)	1.00 (1.31)	1,420	1,390	5	1,080	○	◎	△
	1.60 (2.09)	1.20 (1.57)	1,570	1,450	5	1,140	◎	△	×
Breaker	-	-	-	-	-	-	○	○	○
Nibbler (crusher)	-	-	-	-	-	-	○	○	○

ABOUT SYMBOLS IN THE APPLICABLE ARM COLUMN

◎	Standard combination
○	General work: Digging and loading work of sand, gravel and clay-like earth
△	Light work: Operations which is mainly loading of loose soil, etc. (For example, field work and loading operation of sand and gravel)
×	Unusable: This is not covered by warranty and should not be used.

Notice

- When installing an attachment to this machine, use a genuine attachment or the one which is recommended by KOBELCO.
- When a problem occurs to this machine or attachments/equipment due to use of attachments/equipment not specified by KOBELCO, manufacturer's warranty does not apply.
- Before using an inversely installed bucket, check that it does not interfere with the arm because interference can occur during operation and cause damage.

Copyright©2022 Kobelco Construction Machinery Co.,Ltd. All rights reserved. [S2LC00054ZE11] [0609CsCshWbYs]

Copyright©2022 Kobelco Construction Machinery Co.,Ltd. All rights reserved. [S2LC00054ZE11] [0609CsCshWbYs]

7. MACHINE OPERATION MANAGEMENT SYSTEM

Copyright©2022 Kobelco Construction Machinery Co.,Ltd. All rights reserved. [S2LC00054ZE11] [0609CsCshWbYs]

Copyright©2022 Kobelco Construction Machinery Co.,Ltd. All rights reserved. [S2LC00054ZE11] [0609CsCshWbYs]

7.1 MACHINE OPERATION MANAGEMENT SYSTEM

- Machine Operation Management System is the system that manages information, such as the operating information and failure of the hydraulic excavator.
- To use this system, communication contract is required. Consult your KOBELCO authorized dealer for the contract.

WARNING ABOUT DISASSEMBLY AND REPAIR

Never disassemble or repair the communication controller or transceiving antenna of this system. Do not pinch the cable or pull it by force and damage it. This may cause a failure or fire of the machine.

CAUTION

- Electromagnetic waves generated from the components of this system may adversely affect the medical electric devices, such as cardiac pacemaker device.
  When using medical electric devices while operating the machine, use extreme caution and consult the manufacturers of the medical electric devices in advance.
- Do not spill water over the cable and the components of this system. This may cause a failure of the machine.

Notice

- Installation and removal of the components and the cable of this system is performed by your KOBELCO authorized dealer.
- The communication controller of this system does not require inspection and operation.

Notice

- Because this system uses wireless signals, it cannot be used in a place where no radio wave reaches (in the mountains, inside a building, in a tunnel, etc.), in a place of weak radio wave, or outside the communication area. When making the contract, check the communication area with your KOBELCO authorized dealer.
- This system consumes very little electricity even when the starter switch is OFF (turned off).
  For a long term storage of the machine, see "PRECAUTIONS FOR LONG-TERM STORAGE" in Chapter 3.
- The battery of the communication controller is consumables. Battery life may vary depending on the use environment. However, it should be replaced regularly approximately once every year.

Copyright©2022 Kobelco Construction Machinery Co.,Ltd. All rights reserved. [S2LC00054ZE11] [0609CsCshWbYs]

7.2 REMOTE DOWNLOAD SYSTEM

This system sometimes automatically renews (downloads) the software of the controller in this machine.
At that time, the instruction will appear on the gauge cluster, so that operate the switch panel of the gauge cluster.

(1) Screen Change Switch
(2) Buzzer Stop Switch
(3) Work Mode Select Switch
(4) Washer Switch
(5) Wiper Switch
(6) Travel Speed Select Switch
(7) Auto Acceleration Switch
(8) Menu Switch
(9) Arrow Switch
(10) Attachment Mode Select Switch

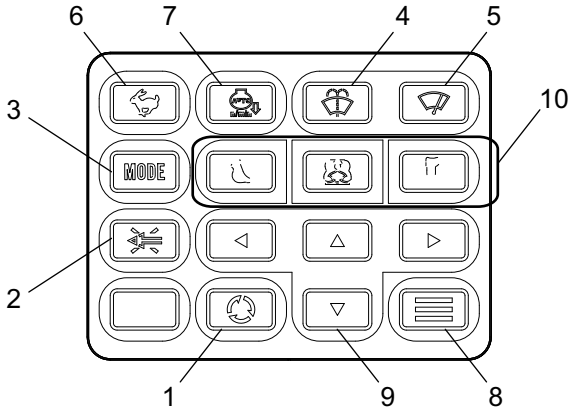

1. When the renewal of the software becomes possible, turn the starter switch to the "ON" position, or turn it to the "START" position and start the engine, then the following selection screen appears on the gauge cluster.
2. Using the up and down arrow switches (9), move the cursor to "ACCEPT".
3. Press "menu switch" (8) to set the renewal. (At this time, the renewal of the software does not start)
4. Then the screen returns to the normal screen, so that continue the machine operation.
5. Then, turn the starter key to the "OFF" position to display the following screen on the gauge cluster, and then the renewal of the software starts. It takes almost 10 minutes for the renewal.

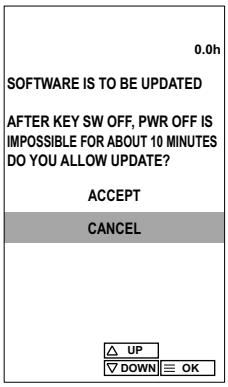

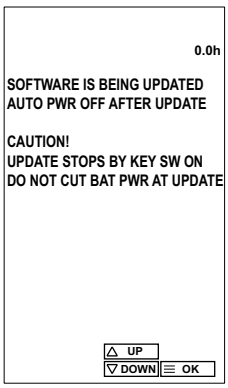

⚠CAUTION

During the renewal of the software, do not turn OFF the battery power-off switch or remove the battery terminals. If the battery power is shut off during the renewal, it can damage the controller.

Copyright©2022 Kobelco Construction Machinery Co.,Ltd. All rights reserved. [S2LC00054ZE11] [0609CsCshWbYs]

6. When the renewal is completed, the following screen appears on the gauge cluster and the power turns OFF.

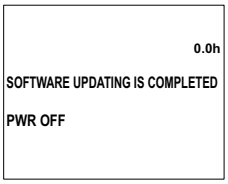

Notice

- The renewal of the software is performed when required.
- The renewal of the software will not start when "CANCEL" is set, 30 seconds elapses with the selection screen displayed, or the pilot control shut-off lever is moved to the "UNLOCKED" position, even if the starter key is turned "OFF".
  In that case, the next time the starter key turns "ON", the selection screen appears again.
- During the renewal of the software, if the starter key turns "ON", the renewal stops and the power turns OFF.
  In that case, the next time the starter key turns "ON", the selection screen appears again.
- If a certain period has passed after the selection screen appeared because "CANCEL" has been set repeatedly, the selection screen stops to appear and the renewal of the software is not performed.
- The renewal of the software sometimes fails. At that time, the following screen appears on the gauge cluster and the power turns OFF.
  In that case, the next time the starter key turns "ON", the selection screen appears again.
  When the renewal of the software keeps failing, contact your KOBELCO authorized dealer.

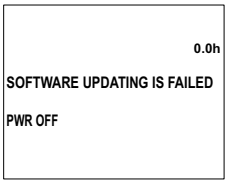

Copyright©2022 Kobelco Construction Machinery Co.,Ltd. All rights reserved. [S2LC00054ZE11] [0609CsCshWbYs]

Copyright©2022 Kobelco Construction Machinery Co.,Ltd. All rights reserved. [S2LC00054ZE11] [0609CsCshWbYs]

8. OPTIONAL EQUIPMENT

Copyright©2022 Kobelco Construction Machinery Co.,Ltd. All rights reserved. [S2LC00054ZE11] [0609CsCshWbYs]

Copyright©2022 Kobelco Construction Machinery Co.,Ltd. All rights reserved. [S2LC00054ZE11] [0609CsCshWbYs]

8.1 OPERATION OF HYDRAULIC NIBBLER (CRUSHER) AND BREAKER

8.1.1 SELECTION OF NIBBLER (CRUSHER) AND BREAKER

- When installing a nibbler (crusher) or a breaker, select a proper one for the machine stability and the working pressure.
  Also, handle it by following precautions of handling specified by the manufacturer of the nibbler (crusher) or the breaker.
- Use of the unapproved attachment/equipment voids KOBELCO's liability for the machine.

8.1.2 INSTALLATION OF NIBBLER (CRUSHER) OR BREAKER

After installing the nibbler (crusher) or the breaker, check that there are no looseness of the installation portions, oil leakage from the piping, and abnormal sound before starting operation.
After removing the nibbler (crusher) and the breaker, plug the machine side piping at the arm end and the nibbler (crusher) or breaker piping to prevent foreign materials and water from entering the piping.

8.1.3 PRECAUTIONS IN USE OF BREAKER

DO NOT PRY AND BREAK FORCIBLY

Do not break a rock or concrete by prying it with the breaker. Prying may cause damages to the boom, the arm, and the breaker.



DO NOT USE BREAKER FOR OTHER THAN INTENDED PURPOSE

Do not break a rock or concrete by falling or hitting the breaker.
Hitting may cause damages to the boom, the arm, the breaker, and the base machine.

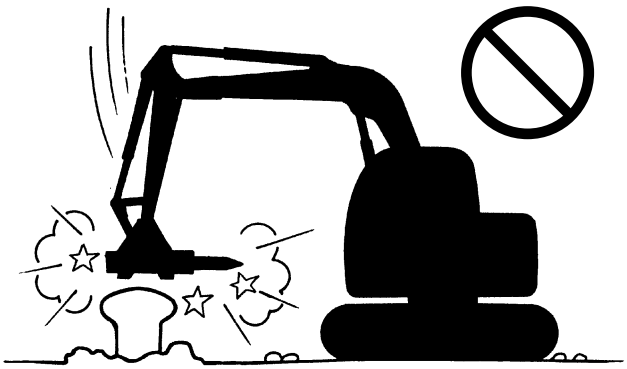

Copyright©2022 Kobelco Construction Machinery Co.,Ltd. All rights reserved. [S2LC00054ZE11] [0609CsCshWbYs]

DO NOT MOVE DEBRIS

Do not use the breaker for moving debris and others. Especially, when pulling down rocks and others with the flank of the breaker by using the swinging force, it may cause damages to the boom, the arm, the breaker, and the base machine.

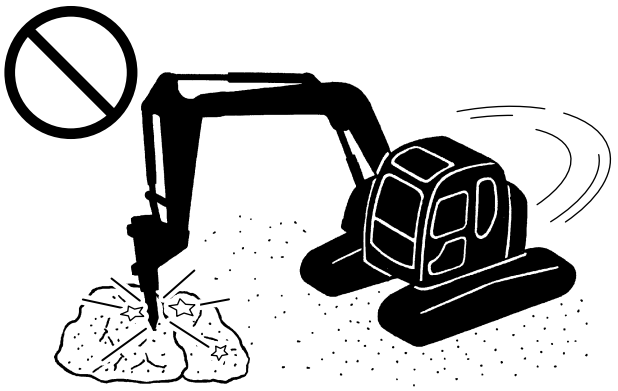

CYLINDER ROD AT STROKE END

Operate the cylinder rod with leaving some space to the stroke end.
Operating the hydraulic cylinder at the stroke end during demolition work may cause excessive loads on the boom, the arm, and the base machine, resulting in damages.

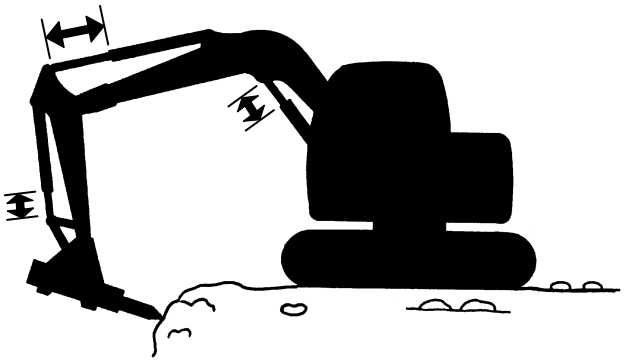

CONTINUOUS USE FOR 1 MINUTE OR LONGER

If an object cannot be broken by hitting the same point for 1 minute or more, change the target point.
Using the breaker continuously causes increase of the hydraulic oil temperature or abnormal wear of the breaker chisel.

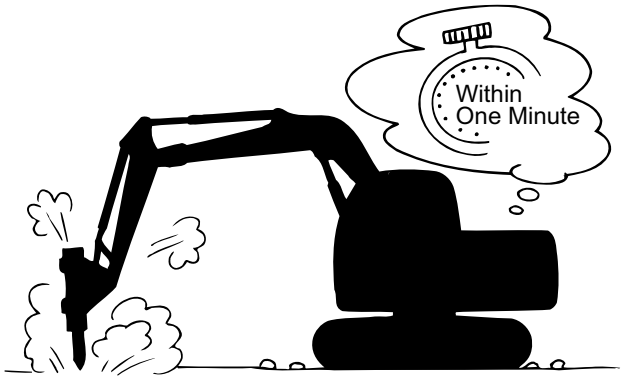

Copyright©2022 Kobelco Construction Machinery Co.,Ltd. All rights reserved. [S2LC00054ZE11] [0609CsCshWbYs]

NEVER PERFORM LIFTING WORK

Never use the breaker for lifting work.

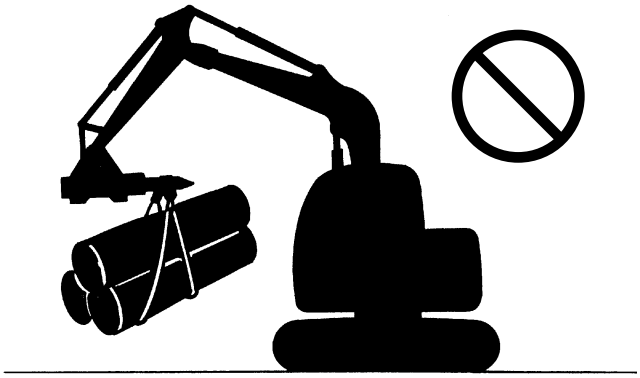

DO NOT OPERATE BREAKER IN WATER

Do not operate the breaker in water.
Working in the water can cause rust on the breaker and damage the sealed portions. Consequently, rust, dirt, and water may enter the hydraulic oil and damage the hydraulic components of the base machine.

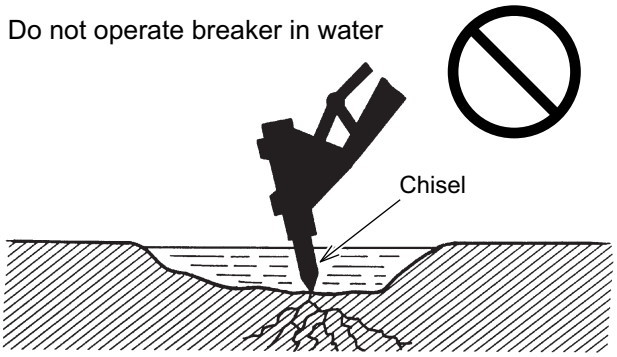

STOP WORKING WHEN HOSE SWINGS

When the hydraulic hose swings abnormally during breaker work, stop the work and immediately contact your KOBELCO authorized dealer.
If you continue working, it may cause damages to the hydraulic components and piping.

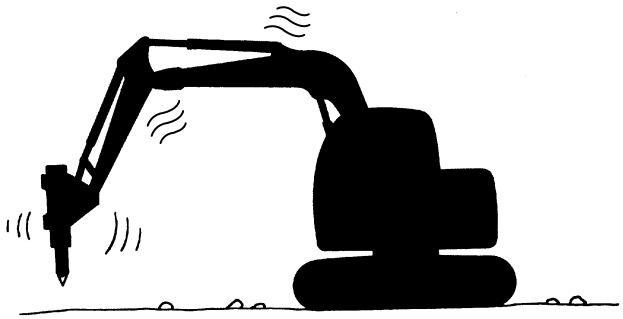

DO NOT OPERATE BREAKER WITHOUT OBJECT

Do not operate the breaker without an object. Operation without an object causes increase of the hydraulic oil temperature and damages to the breaker.



Copyright©2022 Kobelco Construction Machinery Co.,Ltd. All rights reserved. [S2LC00054ZE11] [0609CsCshWbYs]

PAY ATTENTION TO LIFTING UP OF MACHINE

The lifting amount of the machine during breaker work shall be 10 to 15cm.
If the lifting amount is large, it can cause damages to the boom and the arm.

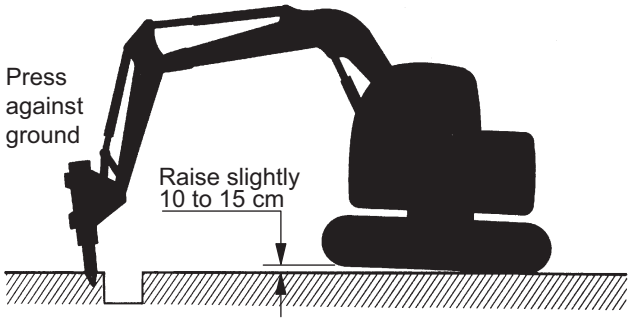

ARM IN VERTICAL POSITION

Do not work with the arm positioned perpendicular to the ground.
It will cause the arm cylinder to swing largely, resulting in oil leakage from the cylinder.

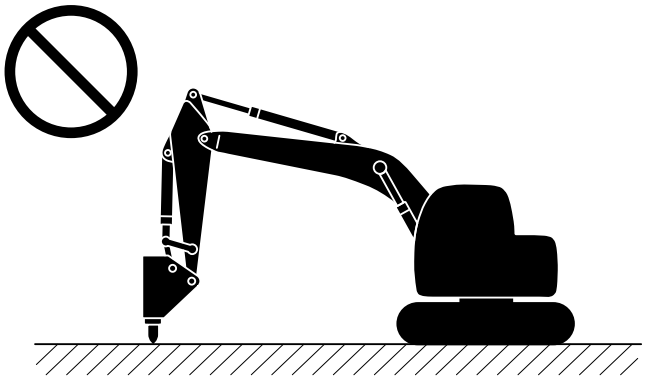

DO NOT WORK FACING SIDEWAYS

Do not operate the breaker when the machine is facing sideways.
It will cause excessive loads on the travel system, resulting in bending of the shoe plates and oil leakage from the roller.

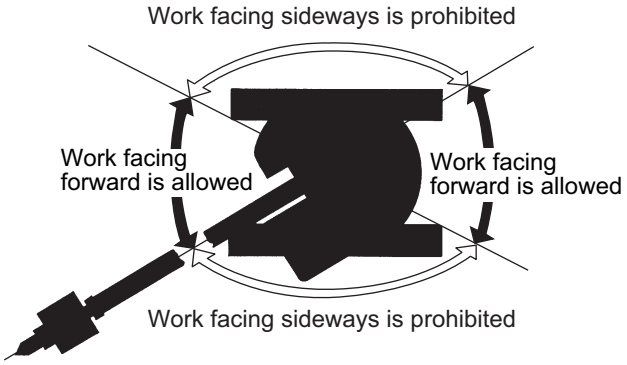

PAY ATTENTION TO DIRECTION OF BREAKER

The pushing direction of the breaker shall be in the same direction of the chisel axle. Apply the chisel perpendicularly to a surface to be broken during operation.
If you work in an unnatural posture, the sealed portions of the breaker may be damaged, causing foreign materials or water to enter the machine and resulting in damages to the hydraulic components.

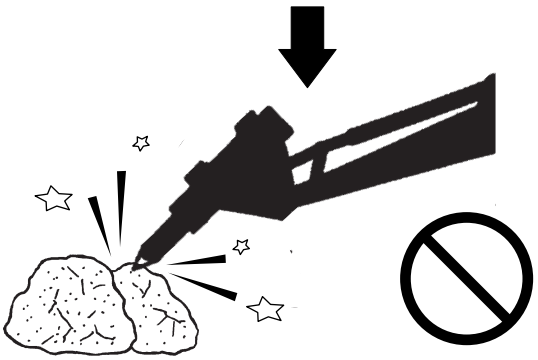

Copyright©2022 Kobelco Construction Machinery Co.,Ltd. All rights reserved. [S2LC00054ZE11] [0609CsCshWbYs]

DO NOT OPERATE BREAKER IN HORIZONTAL OR UPWARD DIRECTION

Do not operate the breaker in the horizontal or upward direction.
It will cause excessive loads on the boom, the arm and the base machine, resulting in damages.



PAY ATTENTION TO INTERFERENCE BETWEEN CHISEL AND BOOM

When the machine is in a position of holding the breaker inward, it may cause interference between the chisel and the boom. Be careful about operation.



Copyright©2022 Kobelco Construction Machinery Co.,Ltd. All rights reserved. [S2LC00054ZE11] [0609CsCshWbYs]

8.1.4 PRECAUTIONS IN USE OF NIBBLER (CRUSHER)

⚠CAUTION

To protect the operator from flying debris and demolished structures, install the front guard and top guard on the cab before demolition.

DO NOT PRY OBJECT

Do not pry or pull down an object while holding it by the nibbler (crusher).
Prying may cause damages to the boom, the arm, and the nibbler (crusher).

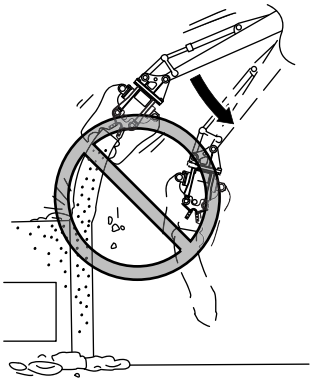

DO NOT USE NIBBLER (CRUSHER) FOR OTHER THAN INTENDED PURPOSE

Do not drop or hit the nibbler (crusher) to an object.
Hitting may damage the boom, the arm, the nibbler (crusher), and the base machine.

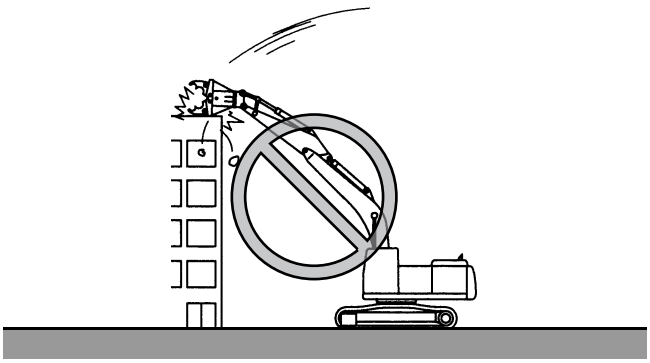

DO NOT SWING DURING NIBBLER (CRUSHER) WORK

Do not demolish or pull down an object by using the swinging force of the machine while holding the object by the nibbler (crusher).
It may cause damages to the boom, the arm, the nibbler (crusher), and the base machine.

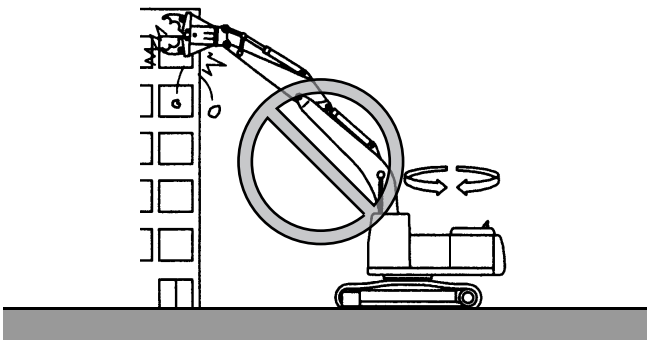

Copyright©2022 Kobelco Construction Machinery Co.,Ltd. All rights reserved. [S2LC00054ZE11] [0609CsCshWbYs]

DO NOT TRAVEL DURING NIBBLER (CRUSHER) WORK

Do not demolish or pull down an object by traveling the machine while holding the object by the nibbler (crusher).
It may cause damages to the boom, the arm, the nibbler (crusher), and the base machine.

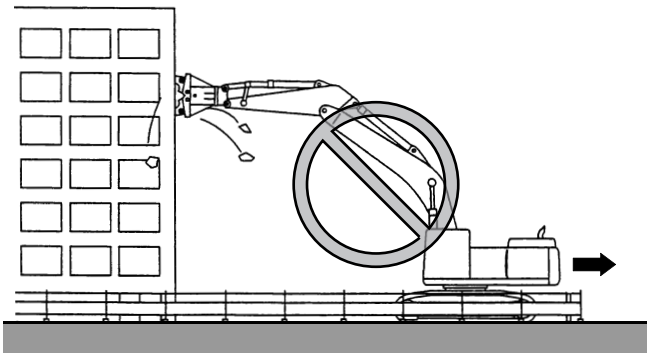

DO NOT WORK ON UNSTABLE PLACE

Do not perform work when the machine is on a weak ground or debris.
Working under unstable condition may cause the machine to tip over.

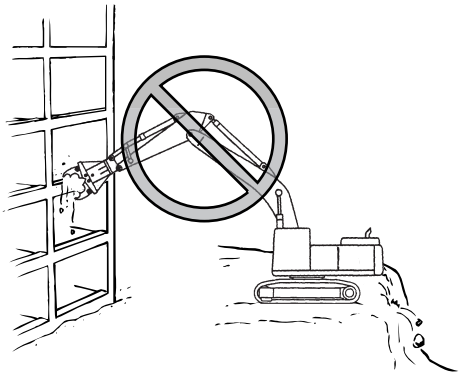

WATCH OUT FOR FALLING OBJECTS OVERHEAD

Operating the nibbler (crusher) over the machine can cause demolished structures to fall onto the machine.

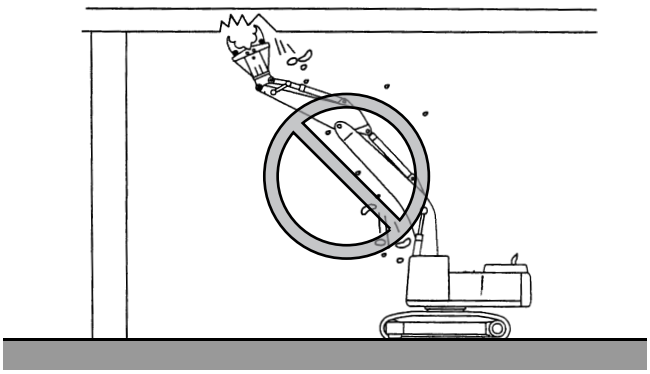

Copyright©2022 Kobelco Construction Machinery Co.,Ltd. All rights reserved. [S2LC00054ZE11] [0609CsCshWbYs]

PAY ATTENTION TO GROUND

If an object under the machine is demolished, it causes the ground of the machine to be unstable, resulting in falling of the machine.

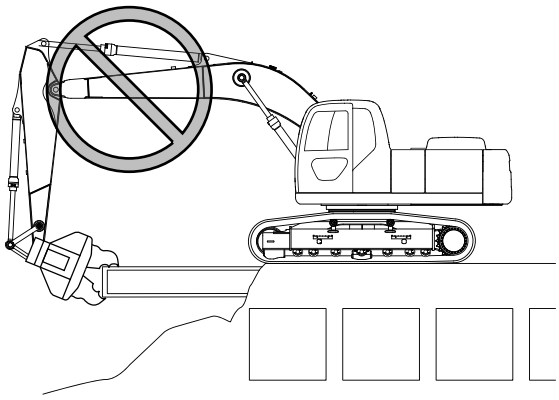

DO NOT OPERATE MACHINE ABRUPTLY

Do not operate or stop the boom, the arm, and the nibbler (crusher) abruptly.
It can cause damages to each cylinder and the machine to tip over.

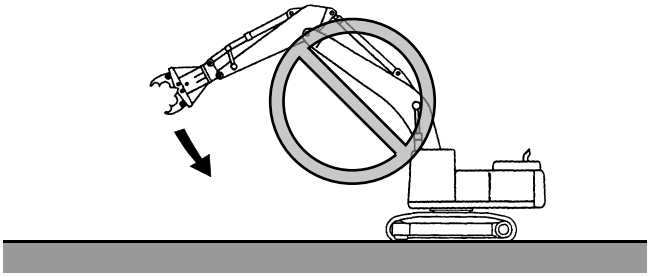

CYLINDER ROD AT STROKE END

Operate the cylinder rod with leaving some space to the stroke end.
Operating the hydraulic cylinder at the stroke end during demolition work may cause excessive loads on the boom, the arm, the link portions, and the base machine, resulting in damages.

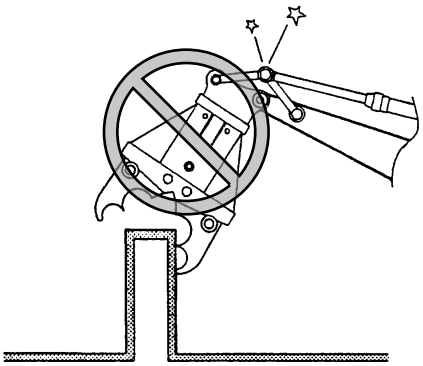

Copyright©2022 Kobelco Construction Machinery Co.,Ltd. All rights reserved. [S2LC00054ZE11] [0609CsCshWbYs]

DO NOT HOLD OBJECT OBLIQUELY BY NIBBLER (CRUSHER)

Do not set the machine in a position or posture in which the nibbler (crusher) has to hold an object obliquely.
It will cause excessive loads on the arm and the link portions, resulting in damages.

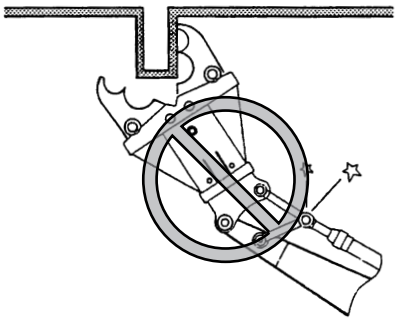

NEVER PERFORM LIFTING WORK

Never use the nibbler (crusher) for lifting work.

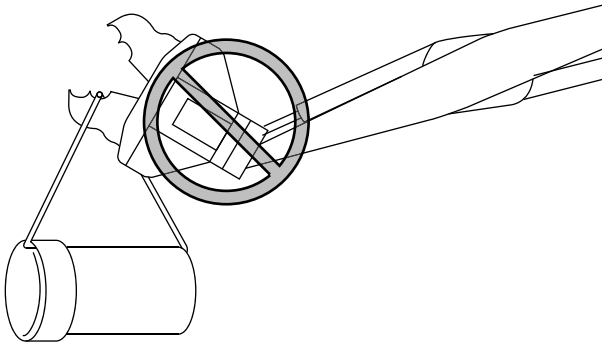

DO NOT LIFT BASE MACHINE

Do not lift up the base machine by pushing the nibbler (crusher) against the ground.
It will cause damages to the boom, the arm, and the nibbler (crusher).

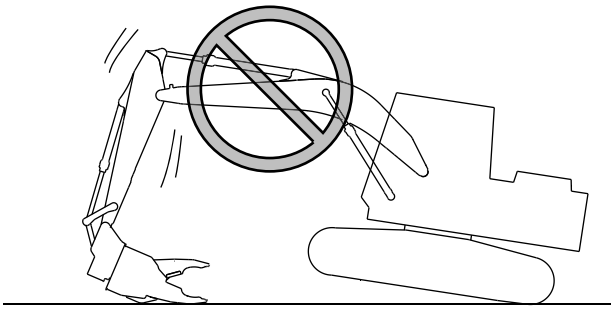

PAY ATTENTION TO WORKING SIDEWAYS

Operating the nibbler (crusher) while the machine is facing sideways may cause the crawlers to be raised off the ground and the machine to become unstable. Always ensure machine is stable before operating.

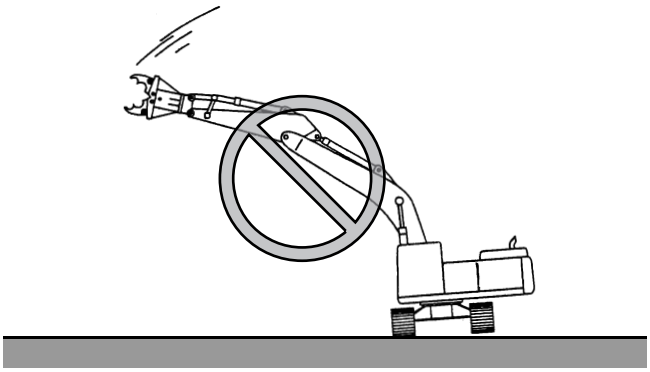

Copyright©2022 Kobelco Construction Machinery Co.,Ltd. All rights reserved. [S2LC00054ZE11] [0609CsCshWbYs]

PAY ATTENTION TO INTERFERENCE BETWEEN NIBBLER (CRUSHER) AND BOOM

When the machine is in a position of holding the nibbler (crusher) inward, it may cause interference between the nibbler (crusher) and the boom. Be careful about operation.

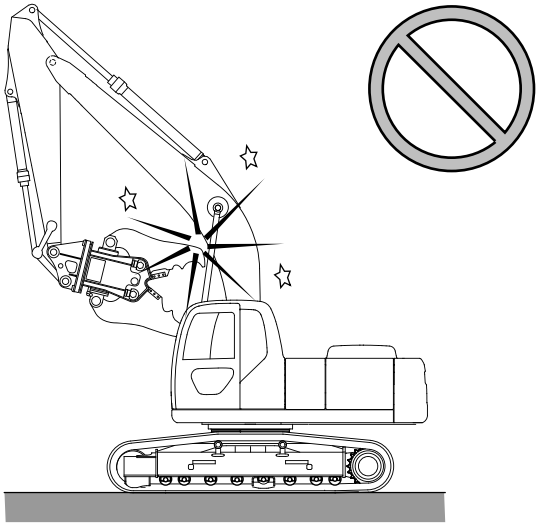

Copyright©2022 Kobelco Construction Machinery Co.,Ltd. All rights reserved. [S2LC00054ZE11] [0609CsCshWbYs]

8.2 SELECTION OF ATTACHMENT MODE AND SELECTOR VALVE

8.2.1 SELECTION OF ATTACHMENT MODE

It is necessary to switch the attachment mode according to the attachment being installed.

⚠CAUTION

- When working with a hydraulic breaker or nibbler (crusher) installed, be sure to check that an appropriate attachment mode is selected, by seeing the attachment mode select switch and the multi-display.
- When the attachment mode is inappropriate, use the attachment mode select switch to switch to an appropriate mode so that the attachment to be used matches the attachment mode.
- When the attachment mode is not selected appropriately, it will cause malfunction or failure of the machine.
- When the attachment mode icon of "bucket", "nibbler", or "breaker" flickers, it tells that the attachment mode is not proper.

The attachment mode is always set according to the position of the attachment mode select switch. Before beginning work, make sure that the selected attachment mode is appropriate.

(1) Nibbler

(2) Breaker

(3) Bucket

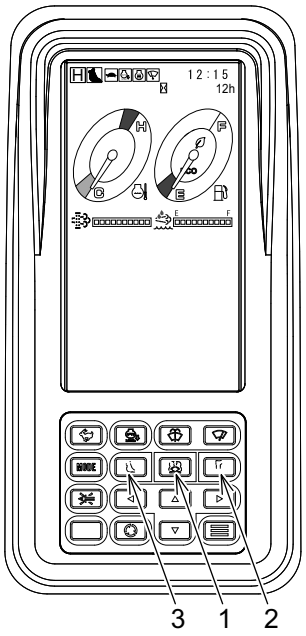

Attachment Mode	Switch Condition	Multi-Display Indication	Selection of Attachment
Breaker mode		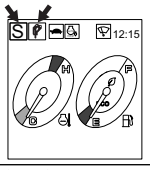 The breaker symbol appears. The work mode of "S", "E", or "H" is shown upper left.	Select this mode when the attachment like a breaker requires the single flow circuit.
Nibbler mode	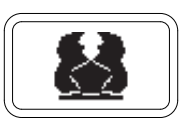	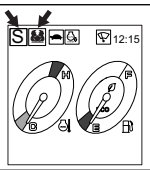 The nibbler symbol appears. The work mode of "S", "E", or "H" is shown upper left.	Select this mode when using the attachment with a flow and return circuit like a nibbler (crusher).
Bucket mode		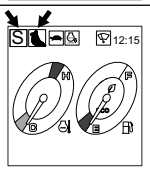 The bucket symbol appears. The work mode of "S", "E", or "H" is shown upper left.	Select this mode when digging.

Copyright©2022 Kobelco Construction Machinery Co.,Ltd. All rights reserved. [S2LC00054ZE11] [0609CsCshWbYs]

CAUTION

- When performing breaker work, be sure to select the breaker mode. Working in a mode other than the breaker mode causes damage in the hydraulic components and/or breaker.
- Be sure to place the attachment to the ground and ensure safety before switching the attachment mode. In particular, switching to the breaker mode during nibbler (crusher) work may cause a holding load to fall off.
- When the attachment mode icon of "bucket", "nibbler", or "breaker" flickers, it tells that the attachment mode is not proper.

WORK MODE AND HYDRAULIC CIRCUIT

Attachment	Attachment Mode	Hydraulic Circuit	Set Pressure of Overload Relief Valve
In case of single flow circuit attachment, such as breaker	Breaker mode	The return circuit will automatically become a circuit which does not go through the control valve.	Factory setting: 24.5 MPa
In case of flow and return circuit attachment, such as nibbler (crusher)	Nibbler mode	The return circuit will automatically become a circuit which goes through the control valve.	Factory setting: 24.5 MPa

Notice

- When the breaker is installed, the return circuit needs to be returned to the return filter directly without going through the control valve. Therefore, make sure to select the breaker mode. Do not use the breaker mode for other than the breaker.
- The set pressure of overload relief valve is set to 24.5 MPa when being shipped from the factory. Depending on the attachment, adjustment may be required. In that case, contact your KOBELCO authorized dealer.

Copyright©2022 Kobelco Construction Machinery Co.,Ltd. All rights reserved. [S2LC00054ZE11] [0609CsCshWbYs]

8.2.2 SWITCHING SELECTOR VALVE

Selector valve (1) switches the flow of hydraulic oil. The selector valve is switched automatically according to the selected attachment mode. Therefore, it is necessary to switch to an appropriate attachment mode according to the attachment being installed.
For switching the attachment mode, see "SELECTION OF ATTACHMENT MODE" in Chapter 8.

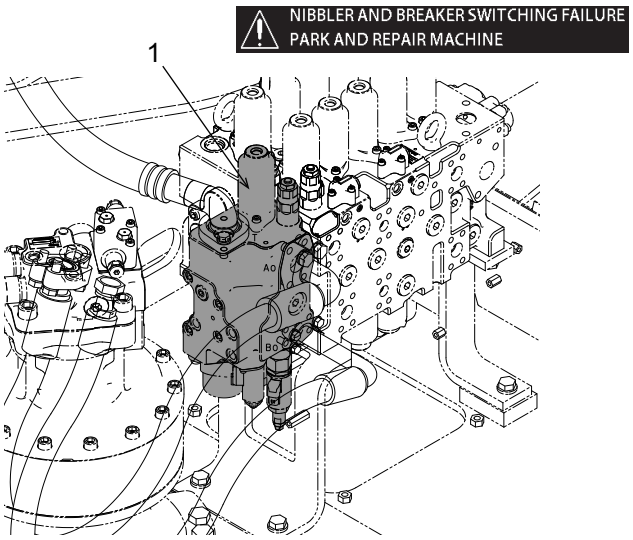

Attachment Mode	Mechatro Controller Output	Hydraulic Circuit	Mechatro Controller Input	
	Selector Switching Valve	Piping	Selector Switching Valve FB	Selector Detecting Pressure FB
Digging/Nibbler	OFF	Nibbler piping	OFF	OFF
Breaker	ON	Breaker piping	ON	ON

CAUTION

When the indication of selector valve failure is displayed on the multi-display, the output and input signals of the mechatro controller may be different from the table.
Turn the attachment mode select switch to select the appropriate attachment mode again. When the indication of selector valve failure does not go off even when the appropriate attachment mode is selected, it may be due to an electric failure. Contact your KOBELCO authorized dealer.

Copyright©2022 Kobelco Construction Machinery Co.,Ltd. All rights reserved. [S2LC00054ZE11] [0609CsCshWbYs]

8.3 SWITCHING STOP VALVE

Stop valves (1), and (2) at the arm top end are used to stop the flow of hydraulic oil. When installing and removing the attachment, the stop valves must be switched to the stop position.

VALVE POSITION

Free: Hydraulic oil flows

Stop: Hydraulic oil stops

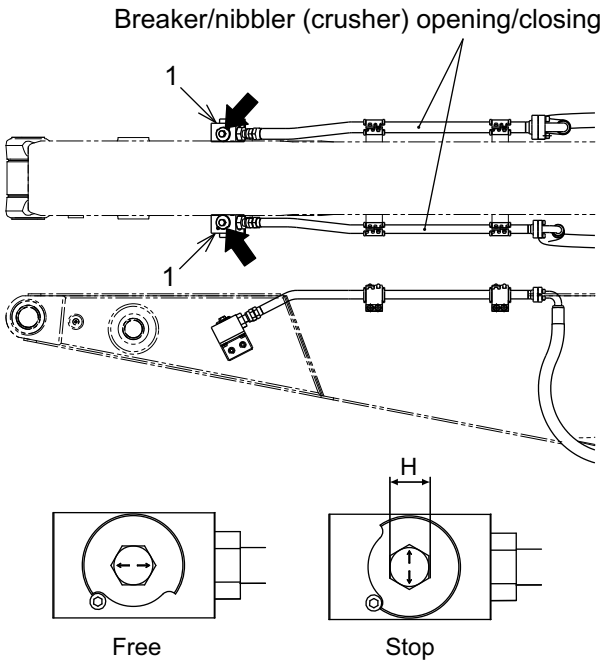

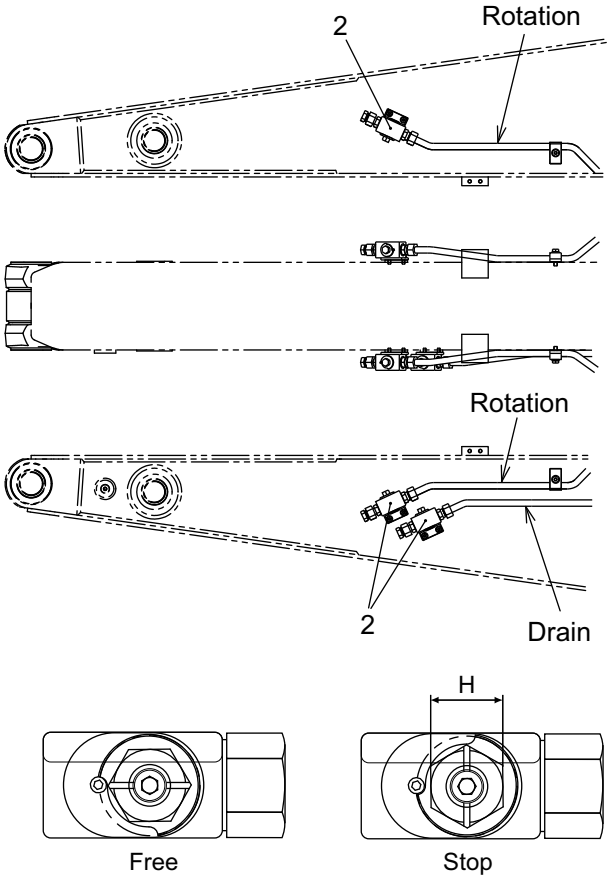

TOOLS

Hydraulic Circuit	Stop Valve	Wrench Size (H)
Breaker/nibbler opening/closing	1	24 mm
Rotation	2	24 mm
Drain		

Copyright©2022 Kobelco Construction Machinery Co.,Ltd. All rights reserved. [S2LC00054ZE11] [0609CsCshWbYs]

8.4 FLOW RATE ADJUSTMENT

Depending on the attachment being installed, the flow rate of service circuit needs to be changed.
For the setting procedure of flow rate, see "USER MENU SETTING" in Chapter 2.

⚠CAUTION

The flow rate specification varies according to each breaker.
Using the breaker at a flow rate over that described in the specification may cause seizure or overheat of the breaker. Make sure to check the specification of each breaker and adjust the flow rate accordingly.

Copyright©2022 Kobelco Construction Machinery Co.,Ltd. All rights reserved. [S2LC00054ZE11] [0609CsCshWbYs]

8.5 OPERATION

WARNING ATTACHMENT TO BE INSTALLED

The operation methods are explained based on the example of a rotation nibbler (crusher) or breaker installed as a front attachment.
The explanation is based on a case that rotational operation system is connected to the rotation pipings and the opening/closing operation system or breaker operation system is connected to the nibbler (crusher) pipings.
Operation may differ depending on a manufacturer and specification of an attachment installed.
Check the operation manual for the manufacturer specification of the attachment before operation.

WARNING ABOUT USE OF PROPORTIONAL HAND CONTROL

Read, fully understand and follow all safety precautions and procedures in this manual before attempting any operation of the machine.

Notice

When using the nibbler or the breaker, see "SELECTION OF ATTACHMENT MODE AND SELECTOR VALVE" in Chapter 8.

8.5.1 PEDAL LOCK DEVICE

This device is used to lock the pedal.
Move the pin (1) forward or backward to lock or unlock.

A: "LOCKED" position

B: "UNLOCKED" position

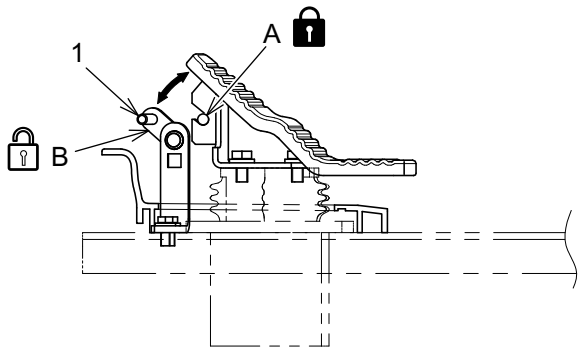

CAUTION

When you do not need to operate the breaker or nibbler, put the pedal lock device to the "LOCKED" position.
Putting your foot on the unlocked pedal or erroneous touch to it may cause sudden attachment movement, resulting in severe personal injury. Do not put your foot on the pedal, except when operating with pedals.

Copyright©2022 Kobelco Construction Machinery Co.,Ltd. All rights reserved. [S2LC00054ZE11] [0609CsCshWbYs]

8.5.2 PEDAL OPERATIONS FOR HYDRAULIC BREAKER AND NIBBLER (CRUSHER) OPENING/CLOSING

Release the pedal lock device on the right front of the operator's seat to operate the pedal.
The table below shows that when the pedal is depressed, which side of the front attachment, left or right, the high pressure oil flows when it is seen from the inside of the cab.

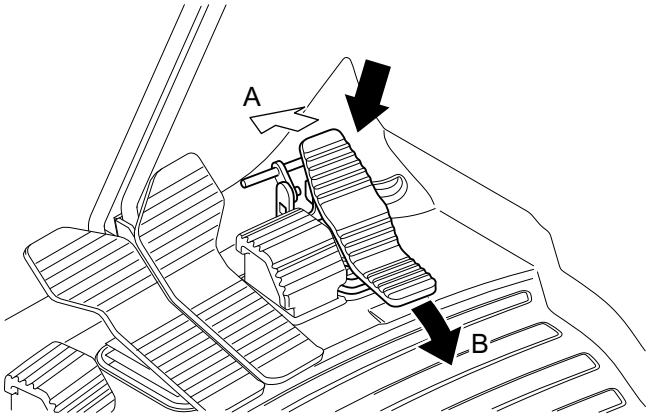

Hydraulic breaker {specification using common hydraulic circuit of breaker and nibbler (crusher)}

Operation procedures	Oil flow
(A) Depress the front part of pedal	L.H
Pedal is in neutral position	Stops (does not flow)

Hydraulic breaker (specification using breaker dedicated circuit)

Operation procedures	Oil flow
(B) Depress the rear part of pedal	L.H
Pedal is in neutral position	Stops (does not flow)

Nibbler

Operation procedures	Oil flow
(A) Depress the front part of pedal	L.H
(B) Depress the rear part of pedal	R.H

Copyright©2022 Kobelco Construction Machinery Co.,Ltd. All rights reserved. [S2LC00054ZE11] [0609CsCshWbYs]

8.5.3 PEDAL OPERATION FOR NIBBLER (CRUSHER) ROTATION

Release the pedal lock device on the right front of the operator's seat to operate the pedal.
The table below shows that when the pedal is depressed, which side of the front attachment, left or right, the high pressure oil flows when it is seen from the inside of the cab.

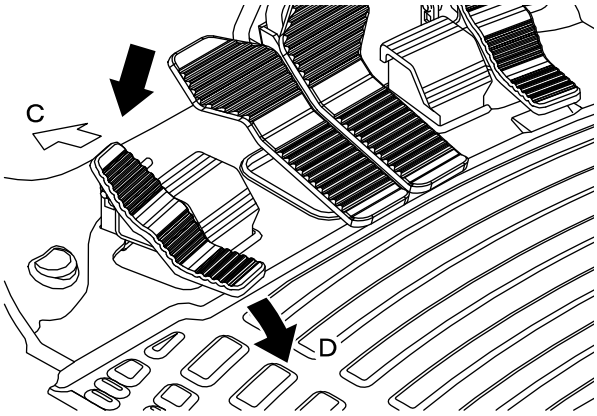

Nibbler

Operation procedures	Oil flow
(C) Depress the front part of pedal	L.H
(D) Depress the rear part of pedal	R.H

Copyright©2022 Kobelco Construction Machinery Co.,Ltd. All rights reserved. [S2LC00054ZE11] [0609CsCshWbYs]

8.6 CONTROL OF PROPORTIONAL HAND CONTROL EXTRA, NIBBLER (CRUSHER), BREAKER

WARNING ATTACHMENT TO BE INSTALLED

The operation methods are explained based on the example of a nibbler (crusher) or breaker installed as a front attachment.
The explanation is based on a case that the opening/closing operation system or breaker operation system is connected to the nibbler (crusher) pipings.
Operation may differ depending on a manufacturer and specification of an attachment installed.
Check the operation manual for the manufacturer specification of the attachment before operation.

WARNING ABOUT USE OF PROPORTIONAL HAND CONTROL

Read, fully understand and follow all safety precautions and procedures in this manual before attempting any operation of the machine.

Notice

When using the nibbler (crusher) or the breaker, see "SELECTION OF ATTACHMENT MODE AND SELECTOR VALVE" in Chapter 8.

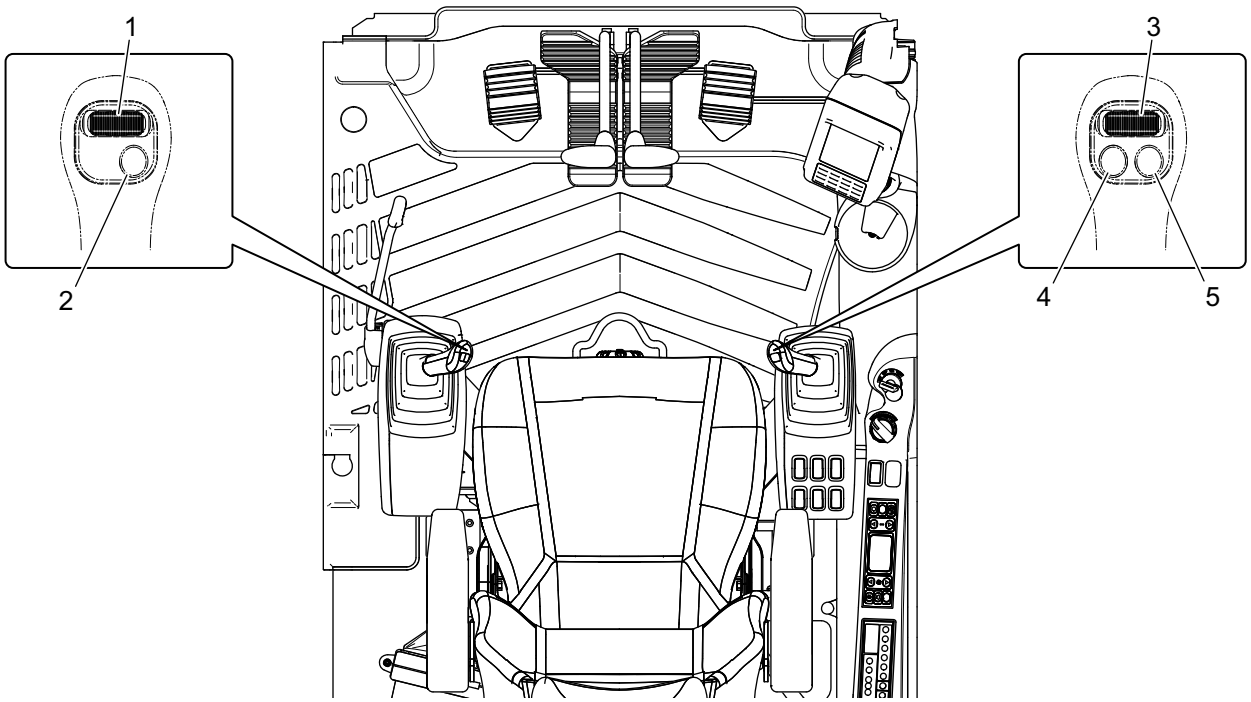

Left Control Lever Switch		Right Control Lever Switch	
1	Extra control switch	3	Nibbler control switch
2	Horn switch	4	Breaker control switch
		5	Power boost switch

Copyright©2022 Kobelco Construction Machinery Co.,Ltd. All rights reserved. [S2LC00054ZE11] [0609CsCshWbYs]

8.6.1 EXTRA HAND CONTROL

Slide switch (1) on the left control lever to actuate the extra.
The table below shows that when switch (1) is slid, the left and right, which side of the front attachment the high pressure oil flows when seeing it from the inside of the cab.

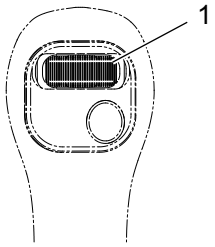

Operation procedures	Oil flow
Sliding to the left	R.H
Sliding to the right	L.H

8.6.2 HORN SWITCH

For horn switch (2), see "HORN SWITCH" in Chapter 2.

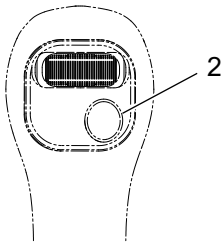

8.6.3 NIBBLER (CRUSHER) OPERATION

Slide switch (3) that is located on the right control lever to open or close the "nibbler (crusher)".
The table below shows that when switch (3) is slid, the left and right, which side of the front attachment the high pressure oil flows when seeing it from the inside of the cab.

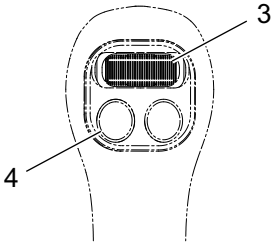

Operation procedures	Oil flow
Sliding to the left	L.H
Sliding to the right	R.H

WARNING NIBBLER (CRUSHER) OPERATION

Do not touch breaker switch (button) (4) when operating the nibbler (crusher).

WARNING PRECAUTIONS FOR LEAVING THE OPERATOR'S SEAT

Do not leave the machine with the engine running.

Notice

According to the slide distance of the nibbler (crusher) control switch, the hydraulic oil flow rate increases.

Copyright©2022 Kobelco Construction Machinery Co.,Ltd. All rights reserved. [S2LC00054ZE11] [0609CsCshWbYs]

8.6.4 BREAKER OPERATION

To operate the breaker, press switch (4).
The table below shows that when switch (4) is slid, the left and right, which side of the front attachment the high pressure oil flows when seeing it from the inside of the cab.
Operate the breaker for 30 seconds, then release the switch.

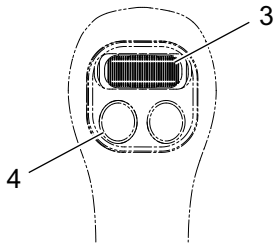

Operation procedures	Oil flow
Press switch (4)	L.H
Release switch (4)	Stops (does not flow)

Notice

The breaker can be operated by sliding nibbler control switch (3) to the left. However, use breaker control switch (button) (4) as much as possible.

WARNING PRECAUTIONS FOR LEAVING THE OPERATOR'S SEAT

Do not leave the machine with the engine running.

8.6.5 POWER BOOST SWITCH

For power boost switch (5), see "POWER BOOST SWITCH" in Chapter 2.

Copyright©2022 Kobelco Construction Machinery Co.,Ltd. All rights reserved. [S2LC00054ZE11] [0609CsCshWbYs]

8.7 CONTROL OF PROPORTIONAL HAND CONTROL NIBBLER (CRUSHER), BREAKER

WARNING ATTACHMENT TO BE INSTALLED

The operation methods are explained based on the example of a nibbler (crusher) or breaker installed as a front attachment.
The explanation is based on a case that the opening/closing operation system or breaker operation system is connected to the nibbler (crusher) pipings.
Operation may differ depending on a manufacturer and specification of an attachment installed.
Check the operation manual for the manufacturer specification of the attachment before operation.

WARNING ABOUT USE OF PROPORTIONAL HAND CONTROL

Read, fully understand and follow all safety precautions and procedures in this manual before attempting any operation of the machine.

Notice

When using the nibbler (crusher) or the breaker, see "SELECTION OF ATTACHMENT MODE AND SELECTOR VALVE" in Chapter 8 in the operation & maintenance manual.

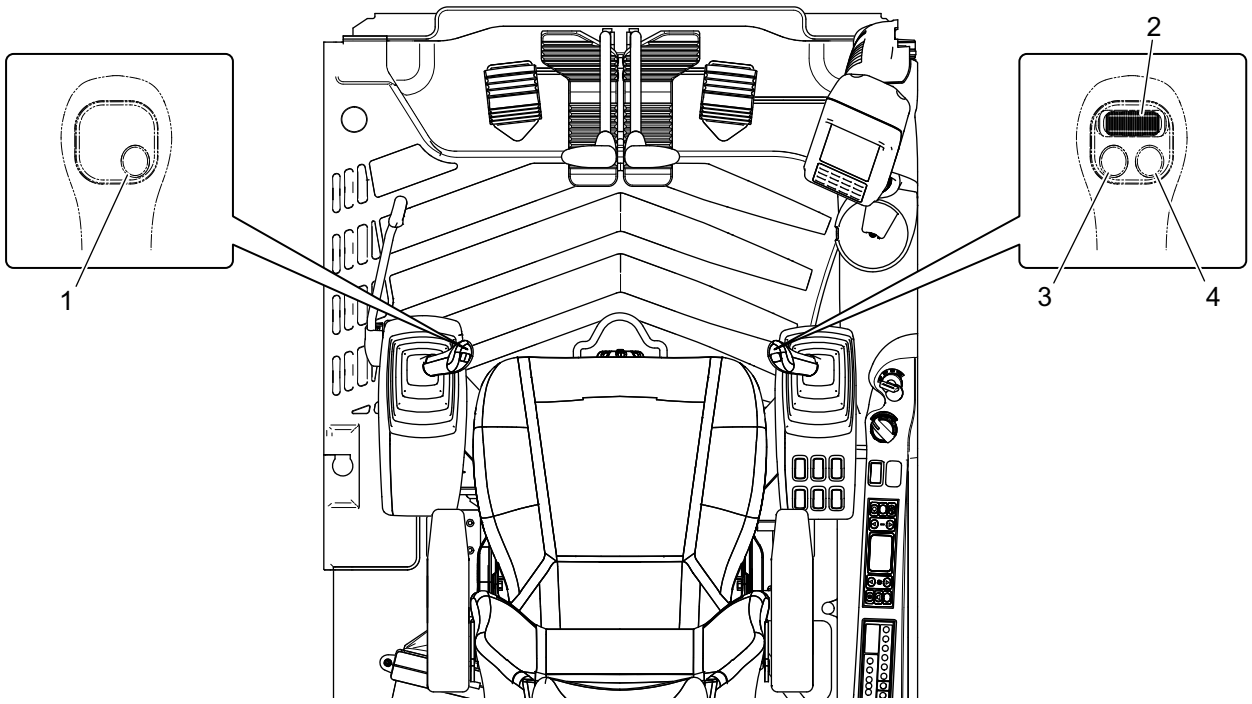

Left Control Lever Switch		Right Control Lever Switch	
1	Horn switch	2	Nibbler control switch
		3	Breaker control switch
		4	Power boost switch

Copyright©2022 Kobelco Construction Machinery Co.,Ltd. All rights reserved. [S2LC00054ZE11] [0609CsCshWbYs]

8.7.1 HORN SWITCH

For horn switch (1), see "HORN SWITCH" in Chapter 2 in the operation & maintenance manual.

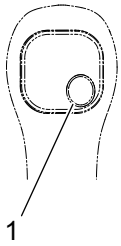

8.7.2 NIBBLER (CRUSHER) OPERATION

Slide switch (2) that is located on the right control lever to open or close the "nibbler (crusher)".
The table below shows that when switch (2) is slid, the left and right, which side of the front attachment the high pressure oil flows when seeing it from the inside of the cab.

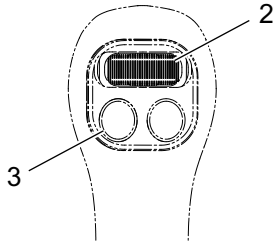

Operation procedures	Oil flow
Sliding to the left	L.H
Sliding to the right	R.H

WARNING NIBBLER (CRUSHER) OPERATION

Do not touch breaker switch (button) (3) when operating the nibbler (crusher).

WARNING PRECAUTIONS FOR LEAVING THE OPERATOR'S SEAT

Do not leave the machine with the engine running.

Notice

According to the slide distance of the nibbler (crusher) control switch, the hydraulic oil flow rate increases.

Copyright©2022 Kobelco Construction Machinery Co.,Ltd. All rights reserved. [S2LC00054ZE11] [0609CsCshWbYs]

8.7.3 BREAKER OPERATION

To operate the breaker, press switch (3).
The table below shows that when switch (3) is slid, the left and right, which side of the front attachment the high pressure oil flows when seeing it from the inside of the cab.
Operate the breaker for 30 seconds, then release the switch.

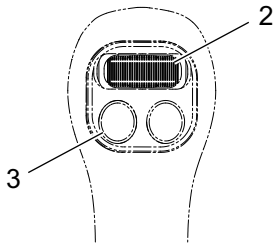

Operation procedures	Oil flow
Press switch (3)	L.H
Release switch (3)	Stops (does not flow)

Notice

The breaker can be operated by sliding nibbler control switch (2) to the left. However, use breaker control switch (button) (3) as much as possible.

WARNING PRECAUTIONS FOR LEAVING THE OPERATOR'S SEAT

Do not leave the machine with the engine running.

8.7.4 POWER BOOST SWITCH

For power boost switch (4), see "POWER BOOST SWITCH" in Chapter 2 in the operation & maintenance manual.

Copyright©2022 Kobelco Construction Machinery Co.,Ltd. All rights reserved. [S2LC00054ZE11] [0609CsCshWbYs]

8.8 PERIODIC INSPECTION AND MAINTENANCE OF NIBBLER (CRUSHER) AND BREAKER

8.8.1 PERIODIC INSPECTION AND MAINTENANCE CHART OF NIBBLER (CRUSHER) AND BREAKER

When this machine is used with the hydraulic breaker, the deterioration and contamination of hydraulic oil becomes faster than that of the normal bucket digging work because the machine is used under more severe conditions. Neglecting the maintenance could result in a failure of the base machine, hydraulic breaker, and hydraulic components. To extend the service life of hydraulic components, replace the hydraulic oil and the filter elements, at the following intervals.

Item	Inspection and Maintenance Point	Replacement Interval (Hours)		
		First Time	Second Time	Periodic
Hydraulic oil	Hydraulic oil tank	—	—	1000
Return filter element kit (P/No.LC52V01004R120)	Hydraulic oil tank	50	250	250

CAUTION

Change the hydraulic oil earlier than the specified interval according to the site condition.

8.8.2 REINFORCEMENT OF ATTACHMENT

When this machine is used with a proper breaker or nibbler (crusher), the factory standard arm does not basically require reinforcement. However, when using the machine for a special purpose, contact your KOBELCO authorized dealer.

Copyright©2022 Kobelco Construction Machinery Co.,Ltd. All rights reserved. [S2LC00054ZE11] [0609CsCshWbYs]

8.9 PRECAUTIONS FROM BREAKER MANUFACTURERS

When installing the breaker, first fully read the precautions for using the breaker and precautions for each breaker.
Installing an accumulator is sometimes required.
Consult your KOBELCO authorized dealer for details before starting installation.

Copyright©2022 Kobelco Construction Machinery Co.,Ltd. All rights reserved. [S2LC00054ZE11] [0609CsCshWbYs]

8.10 MULTI-CONTROL VALVE

DANGER SWITCHING THE MULTI-CONTROL VALVE

When switching the multi-control valve, be sure to stop the engine.

WARNING CHECKING THE CONTROL LEVER PATTERN

- If you do not check the control lever pattern before operation, it is dangerous because it may cause an unexpected machine movement. Be sure to check the movement of the machine at each control lever position before operation.
- If you operate the machine while the control pattern label does not match the actual machine movement, it could cause severe personal injury.
- Replace the control pattern label with a one matching the actual machine movement, or change the lever pattern of the rotary multi-control valve to match the control pattern label.

CAUTION

During engine stop, turn the lever to each control pattern position and then be sure to return it to the original control pattern position, at least once in 500 hours.

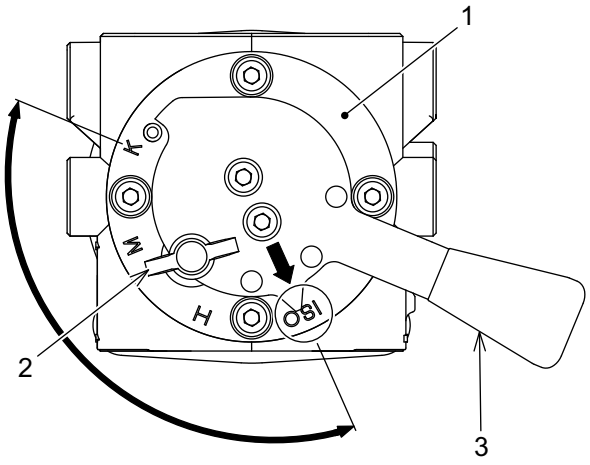

CONTROL PATTERN
ISO (JIS)....KOBELCO, KAWASAKI, KATOU, IHI
H.....KOMATSU, HITACHI, SUMITOMO
M.....MITSUBISHI
K.....KOBELCO (OLD)

Copyright©2022 Kobelco Construction Machinery Co.,Ltd. All rights reserved. [S2LC00054ZE11] [0609CsCshWbYs]

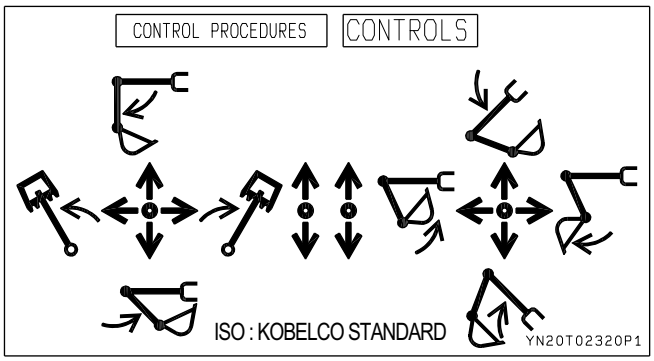

Left swing lever left & right pattern ISO pattern

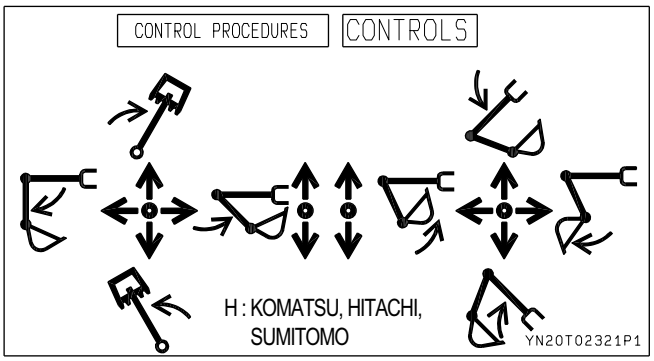

Left swing lever front & rear pattern H pattern

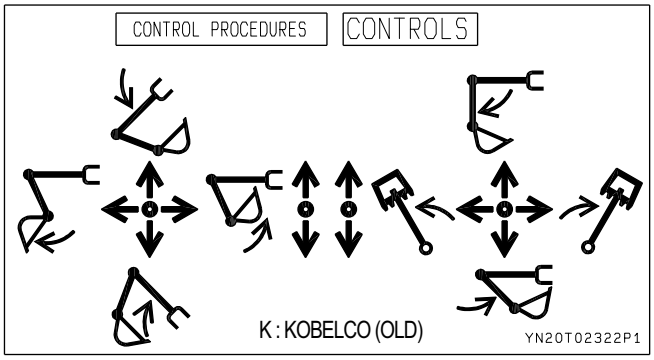

Right swing lever left & right pattern K pattern

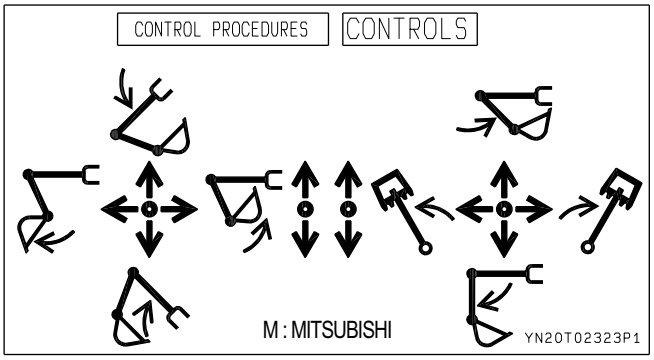

Right swing lever left & right pattern M pattern

The control pattern of this machine can easily be switched between four types (ISO·K·H·M) by the lever of the rotary multi-control valve.

1. Set the machine in the parking position, stop the engine, and move the pilot control shut-off lever to the "LOCKED" position.
2. Use the starter key to open the side door in front of the fuel tank and hold it with the stay.
3. Remove wing bolt (2), and switch lever (3) to the position of the desired control pattern.
4. Tighten wing bolt (2) to fix lever (3) after setting the control pattern. Firmly tighten wing bolt (2) by your fingers without tools.
5. Remove the stay and close the side door. Lock the door with the key.
6. Operate the attachment to make sure that the desired control lever pattern is selected.

Copyright©2022 Kobelco Construction Machinery Co.,Ltd. All rights reserved. [S2LC00054ZE11] [0609CsCshWbYs]

8.11 QUICK HITCH

WARNING HANDLING QUICK HITCH

Regarding a quick hitch to be installed, use the quick hitch having an automatic mechanical locking mechanism such as a lock pin that will ensure the lock.
Because when the hydraulic pipes or electric wires are damaged, the hydraulic holding power will be lost, resulting in falling off of the front attachment.

8.11.1 PROHIBITED WORKS

DO NOT PERFORM LIFTING WORK

Never perform any lifting work using the quick hitch. A lifted load may fall and cause serious accidents.

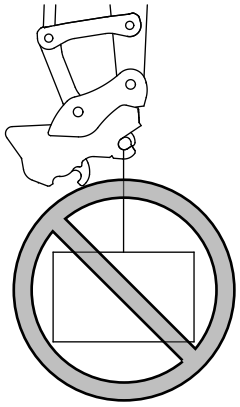

DO NOT WORK WITHOUT FRONT ATTACHMENT

Do not lift a load or the machine, when the front attachment is not installed. It may cause damage to the quick hitch.

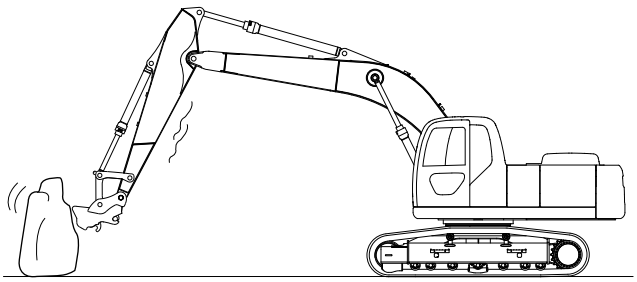

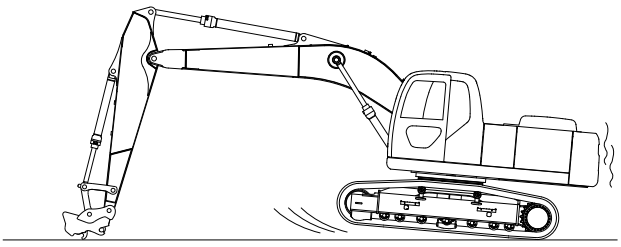

Copyright©2022 Kobelco Construction Machinery Co.,Ltd. All rights reserved. [S2LC00054ZE11] [0609CsCshWbYs]

DO NOT LIFT OR MOVE PERSONNEL

Never lift or move personnel by using the quick hitch. The lifted personnel may fall off, causing severe accidents.



8.11.2 PRECAUTIONS FOR USE

CHECK OPERATION & MAINTENANCE MANUAL OF QUICK HITCH

Before installing the quick hitch, carefully read the operation & maintenance manual of the quick hitch.

CHECK EFFECTS TO OPERATING RANGE AND LIFTING CAPACITIES

When the quick hitch is installed, the operating range and the lifting capacities will be changed. Also, according to the installed quick hitch or front attachment, it may interfere with the attachment/equipment or the base machine. Before starting work, check the operating range, and make sure that the total loads including the weight of the quick hitch, the front attachment, and a load to be handled do not exceed the maximum load described in the rated lift capacity chart inside the cab.

CHECK QUICK HITCH OPERATION SWITCH

When the front attachment is installed, check that the operation switch is in the neutral position before starting the engine.
(See "QUICK HITCH OPERATION SWITCH" in Chapter 2.)
The table below shows that when the switch is slid left or right, which side of the front attachment the high pressure oil flows when seeing it from the inside of the cab.

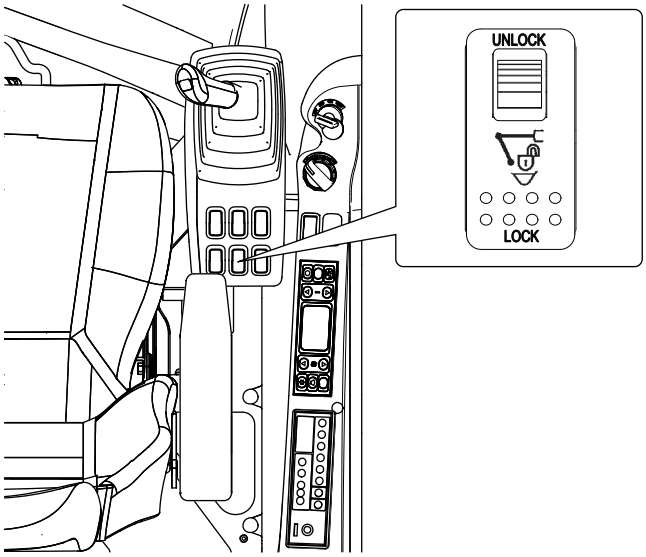

Operation procedures	Oil flow
LOCK side	R.H
UNLOCK side	L.H

INSPECTION BEFORE OPERATION

Before operating the machine, check the installation part for engagement and looseness, and the pipes for oil leakage.

Copyright©2022 Kobelco Construction Machinery Co.,Ltd. All rights reserved. [S2LC00054ZE11] [0609CsCshWbYs]

8.11.3 REMOVING FRONT ATTACHMENT

WARNING REMOVING FRONT ATTACHMENT

- Work on a stable and level ground to prevent the front attachment from falling down.
- Be sure to lower the front attachment to the ground before operating the quick hitch.

The quick hitch shown in the explanation figures is an example.
Before performing this work, carefully read the operation & maintenance manual of the installed quick hitch.

1. Move the machine to a level ground and lower the front attachment to the ground.

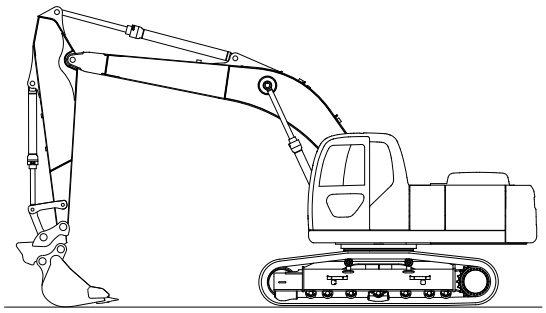

2. Push the "UNLOCK" side of the quick hitch operation switch to move movable hook (1) to release the front attachment.
(See "QUICK HITCH OPERATION SWITCH" in Chapter 2.)

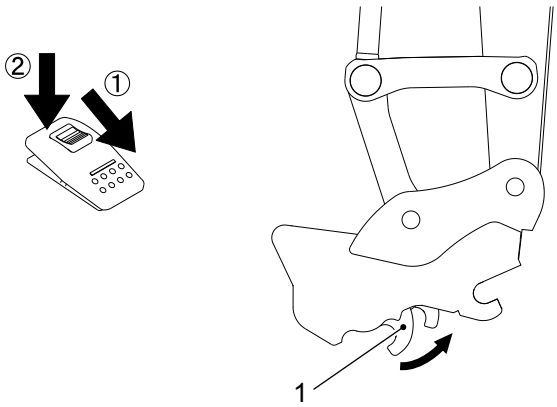

3. Move the attachment/equipment of the machine side to remove the front attachment.

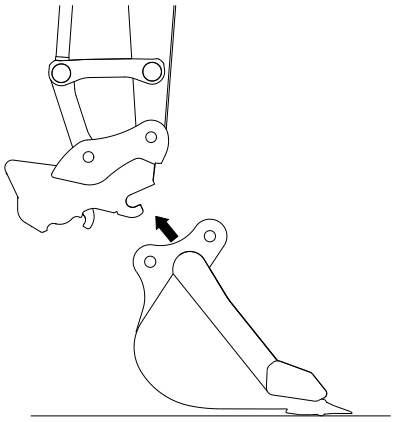

Notice

Some kinds of quick hitch may be difficult to remove from the front attachment. In that case, operate the pressure reducing valve to make the removal work easier.
(See "MANUAL SWITCHING OF PRESSURE REDUCING VALVE FOR QUICK HITCH" in Chapter 8.)

Copyright©2022 Kobelco Construction Machinery Co.,Ltd. All rights reserved. [S2LC00054ZE11] [0609CsCshWbYs]

8.11.4 INSTALLING FRONT ATTACHMENT

WARNING INSTALLING FRONT ATTACHMENT

- Work on a stable and level ground to prevent the front attachment from falling down.
- After installing the front attachment, make sure that the quick hitch holds the front attachment securely.

The quick hitch shown in the explanation figures is an example.
Before performing this work, carefully read the operation & maintenance manual of the installed quick hitch.

1. Place the front attachment on a level ground.
   Attach pins (2) and (3) to the front attachment.

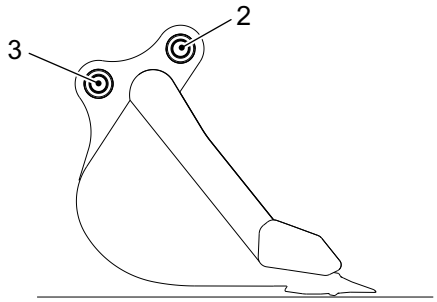

2. Operate the machine to lower the quick hitch and engage fixed hook (4) with pin (2).

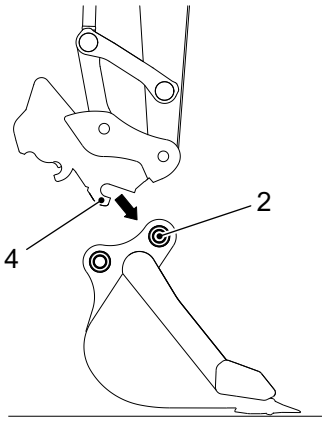

3. Extend the bucket cylinder so that the quick hitch comes in contact with pin (3).
   At that time, make sure that fixed hook (4) engages with pin (2).

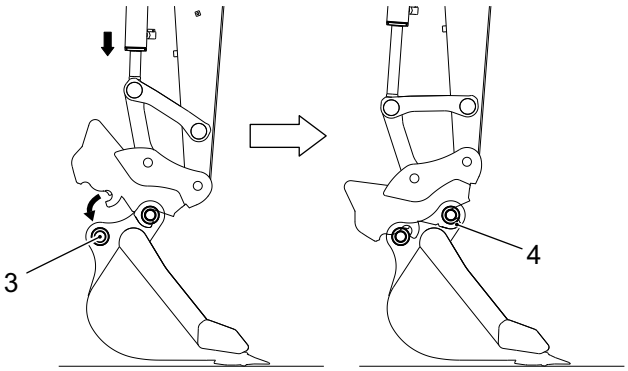

4. Push the "LOCK" side of the quick hitch operation switch to engage movable hook (1) with pin (3). (See "QUICK HITCH OPERATION SWITCH" in Chapter 2).
5. Check that the front attachment is securely installed, according to the operation & maintenance manual of the installed front attachment.

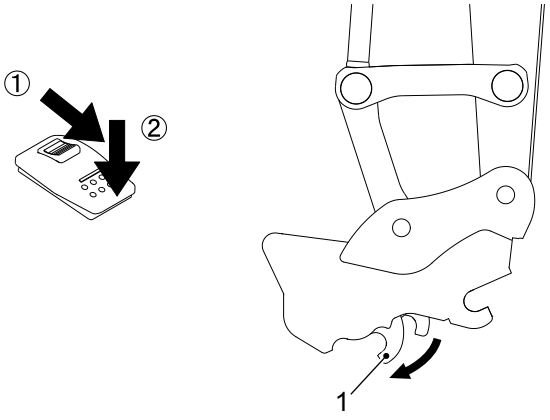

Copyright©2022 Kobelco Construction Machinery Co.,Ltd. All rights reserved. [S2LC00054ZE11] [0609CsCshWbYs]

Notice

If the engagement of the quick hitch cannot be fully checked from the operator's seat, get off the machine and check the engagement at a place close to the quick hitch.

8.11.5 MANUAL SWITCHING OF PRESSURE REDUCING VALVE FOR QUICK HITCH

Some kinds of quick hitch may be difficult to remove from the front attachment.
In that case, switch the pressure reducing valve manually to apply a high pressure on the "UNLOCK" side of the quick hitch to make it easier to remove.

- Turn valve switch knob (1) to direction A to increase the pressure at the unlock side (rod side) of the quick hitch.
  With this condition, remove the front attachment. (See" REMOVING FRONT ATTACHMENT" in Chapter 8.)
- Except when removing the front attachment, turn switch knob (1) to direction B until it reaches the stop position.
  The pressure of the quick hitch at the unlock side (rod side) will be decreased.
  When operating the switch knob, do not stop it halfway but be sure to turn it until it reaches the stop position.

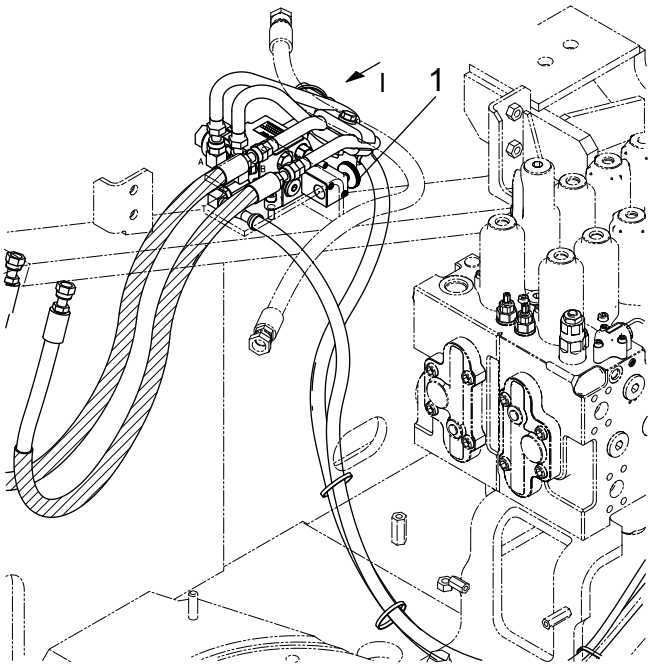

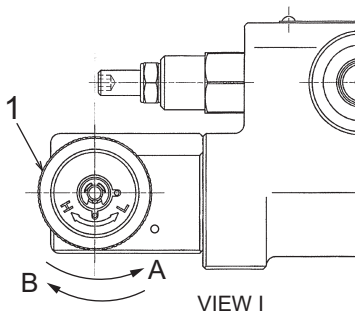

VIEW I

Copyright©2022 Kobelco Construction Machinery Co.,Ltd. All rights reserved. [S2LC00054ZE11] [0609CsCshWbYs]